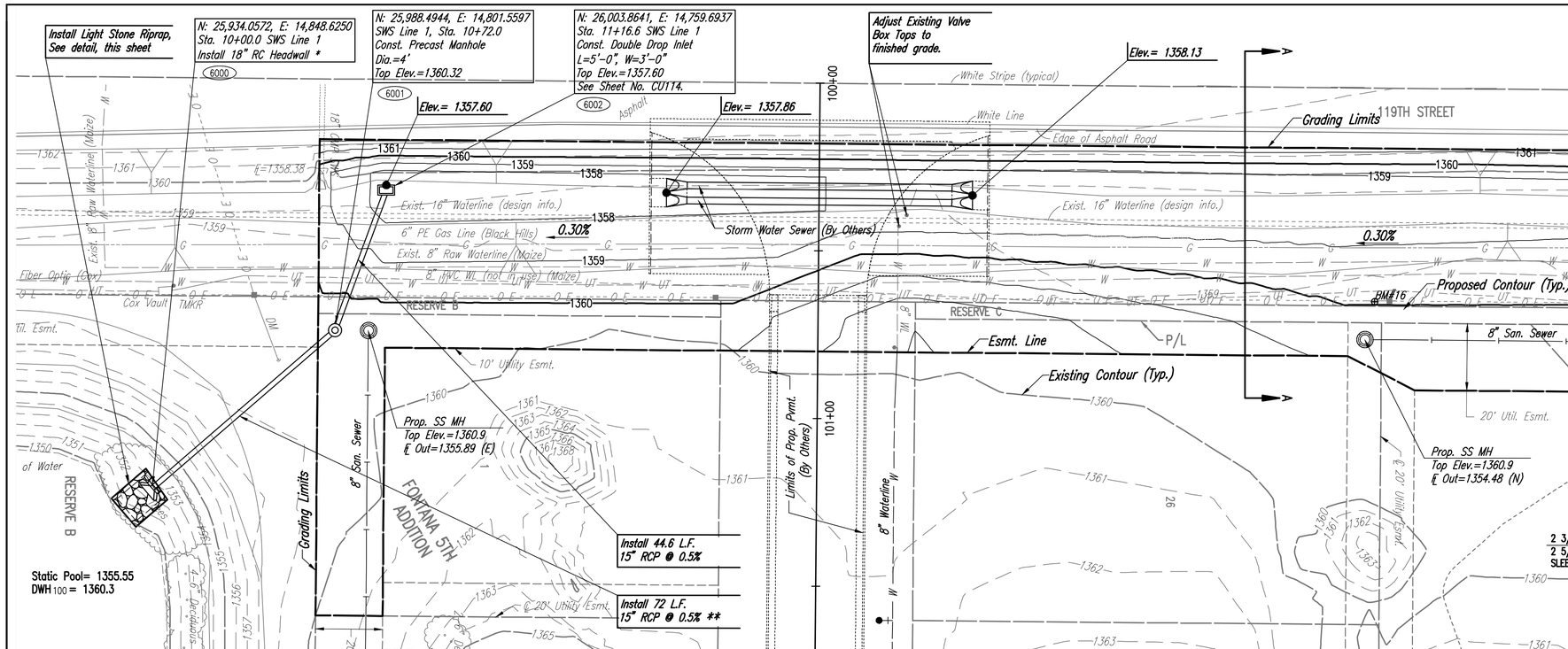

SCALE:

0 20 40

LEGEND

- SILT FENCE
- DITCH CHECKS
- 1257 PROPOSED MAJOR CONTOUR
- 1250 PROPOSED MINOR CONTOUR
- 1380 EXISTING MAJOR CONTOUR
- 1381 EXISTING MINOR CONTOUR
- EASEMENT LINE
- AREA 1 GRADING LIMITS

CONTOUR INTERVAL: 1 FOOT

(6000) – SEE THIS SHEET FOR STORM SEWER COORDINATES (TYP.)

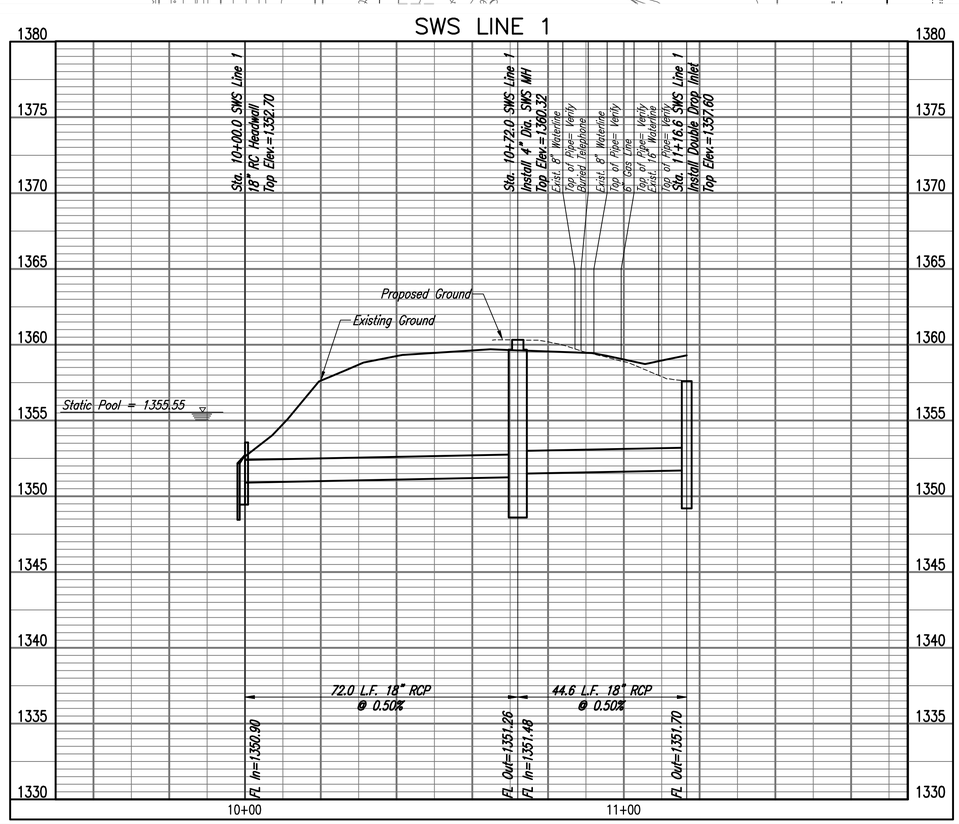

* CONSTRUCT SUITABLE COFFERDAM AND DEWATER AS NECESSARY TO CONSTRUCT STORM WATER SEWER ADJACENT TO PONDS. COFFERDAM MAY BE OF COMPACTED EARTH MATERIAL OR SHEET PILES. UPON COMPLETION OF STORM WATER SEWER, REMOVE COFFERDAM AND RESTORE POND BANKS TO PRE-CONSTRUCTION CONDITION. THIS WORK SHALL BE SUBSIDIARY TO THE UNIT PRICE BID PER FOOT OF PIPE.

** FIRST THREE JOINTS SHALL BE RESTRAINED WITH HEAVY DUTY COUPLERS. SEE DETAILS THIS SHEET.

SANITARY SEWER LINE NO. 1				
COORDINATE LIST				
POINT	NORTHING	EASTING	STATION	DESCRIPTION
6000	25,934.0572	14,848.6250	10+00.0	RC HEADWALL
6001	25,988.4944	14,801.5597	10+72.0	SWS MANHOLE
6002	26,003.8641	14,759.6937	11+16.6	SWS AREA INLET

(6000) = COORDINATE POINT NO.

SEE SHEET NO. CU104 FOR PLAT COORDINATES

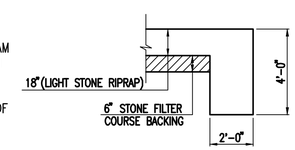

TYPICAL SECTION THRU TOEWALL
NO SCALE

NOTES

1. ALL RIPRAP FOR THIS PROJECT SHALL BE NATURAL STONE. NEITHER BROKEN CONCRETE, FABRIC ENVELOPE, NOR PREMIXED DRY PACKAGED CONCRETE BAG ALTERNATES WILL BE ALLOWED, UNLESS INDICATED OTHERWISE.
2. TOEWALLS SHALL BE INSTALLED ALONG ALL UNPROTECTED EDGES OF STONE RIPRAP.
3. GROUTING OF THE SURFACE OF THE RIPRAP SHALL NOT BE PERFORMED, UNLESS INDICATED OTHERWISE. GROUTING OF THE TOEWALLS SHALL BE PERFORMED PER CITY SPECIFICATIONS.

LIGHT STONE RIPRAP DETAILS

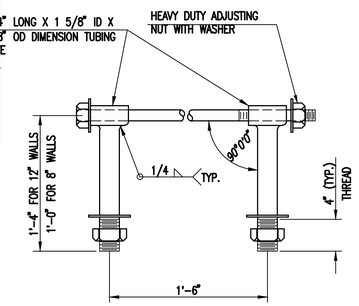

HEAVY DUTY (H.D.) COUPLER
NO SCALE

NOTES

1. BOLTS TO BE A-36 1 1/2" DIAMETER.
2. BOLTS, NUTS, WASHERS AND SLEEVES TO BE ZINC PLATED.
3. WASHERS TO BE 3 1/2" O.D. X 7 GAUGE.
4. SHIP WITH NUTS AND WASHERS PLACED ON BOLTS.

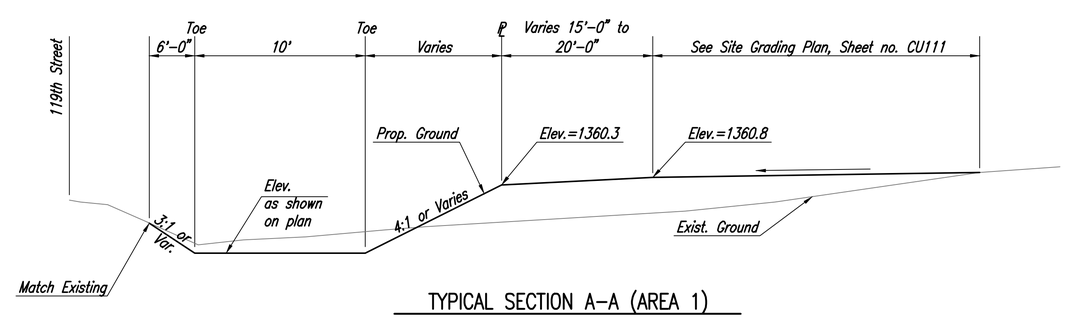

TYPICAL SECTION A-A (AREA 1)

PEC
PROFESSIONAL ENGINEERING CONSULTANTS
303 SOUTH TOPEKA
WICHITA, KS 67202
316-262-2691 www.pec1.com

CITY OF WICHITA

JOSHUA GOLKA LICENSED 24136 03/02/2020 KANSAS PROFESSIONAL ENGINEER

STORM WATER DRAIN IMPROVEMENTS
TO SERVE
FONTANA 5TH - PHASE 2

GARY JANZEN, P.E. - CITY ENGINEER
CITY OF WICHITA PROJECT NO. 468-84589
OCA NO. 751602

Issue:

JOB NO.	35-190592-001-042
DATE	FEBRUARY 2020
PM	JAG
DESIGNED BY	JAG
DRAWN BY	KTD
CHECKED BY	CSB

GRADING PLAN - AREA 1

CU105

Saved 03-02-2020 2:19:53 PM by DUSTIN.BILLINGSLEY
Plot Scale 1:1 03-02-2020 2:38:49 PM by KURTIS.DECKT
U:\Wichita-Civil\2019\190592\001\Main\Drawings\190592-001-CU105