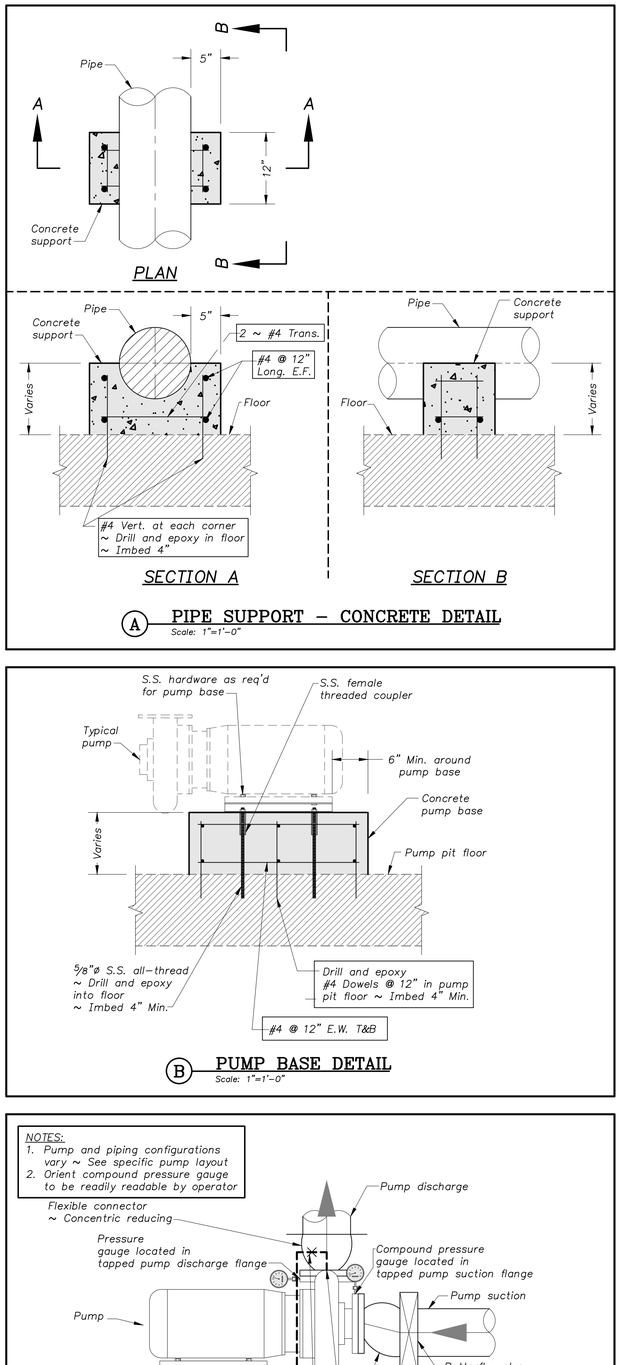

A PIPE SUPPORT – CONCRETE DETAIL
Scale: 1"=1'-0"

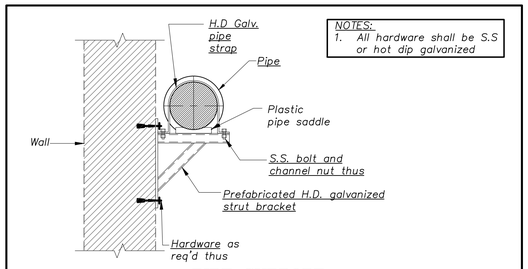

NOTES:
1. All hardware shall be S.S or hot dip galvanized

PIPE SUPPORT
D WALL MOUNT BRACKET DETAIL
Scale: NTS

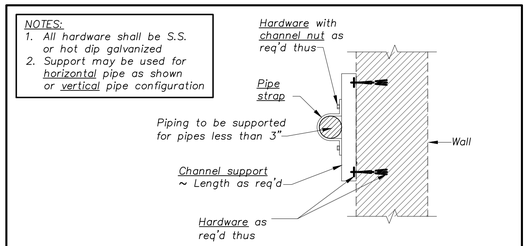

NOTES:
1. All hardware shall be S.S. or hot dip galvanized
2. Support may be used for horizontal pipe as shown or vertical pipe configuration

PIPE SUPPORT
E WALL MOUNT BRACKET DETAIL
Scale: NTS

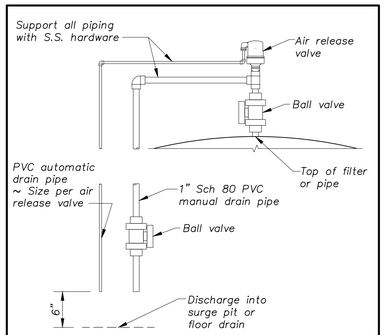

G AIR RELEASE VALVE DETAIL
N.T.S.

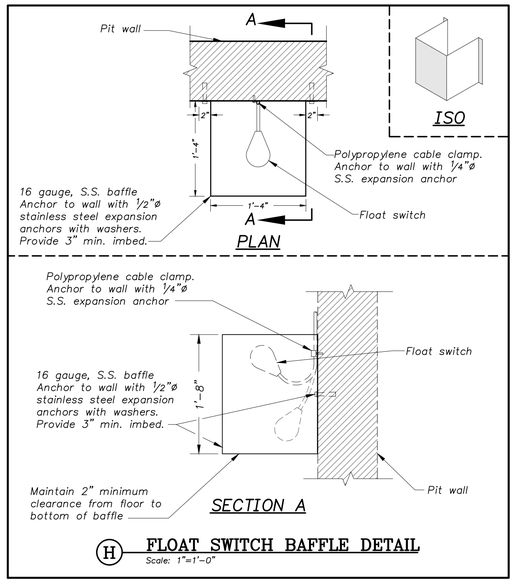

H FLOAT SWITCH BAFFLE DETAIL
Scale: 1"=1'-0"

B PUMP BASE DETAIL
Scale: 1"=1'-0"

NOTES:
1. All hardware shall be S.S. or hot dip galvanized

Provide nonmetallic separation at dissimilar metals as req'd at pipe and support

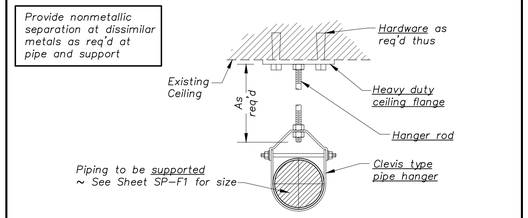

F PIPE SUPPORT – CLEVIS HANGER DETAIL
Scale: 1½"=1'-0"

NOTES:
1. Pump and piping configurations vary ~ See specific pump layout
2. Orient compound pressure gauge to be readily readable by operator

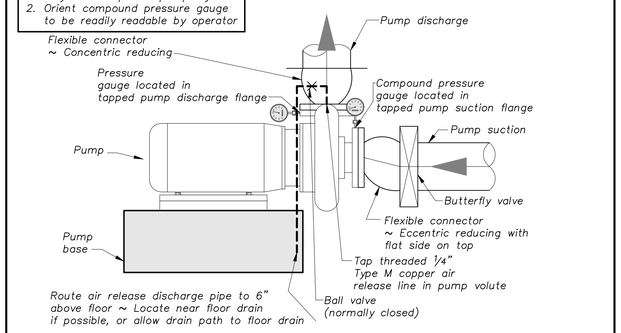

C PUMP CONNECTION DETAIL
Scale: 1"=1'-0"

waters edge AQUATIC DESIGN
11205 W. 79th St.
Lenexa, KS 66214
t. 913.438.4338
www.WeDesignPools.com
Kansas STATE CERTIFICATE OF AUTHORITY #E-990

PEC
landworks STUDIO
ARCHITECTURAL URBAN PRAIRIE COLLABORATIVE, P.C.
H&B HOSS & BROWN ENGINEERS

WICHITA, KANSAS
Spray Ground
LINWOOD PARK

CITY OF WICHITA

Seal:
JEFF A. BARTLEY LICENSED 15116 8/14/20 KANSAS PROFESSIONAL ENGINEER

Jeff Bartley–ENGINEER
LICENSE #15116

Date: 08-14-20	Job #: 18-512
Drawn: CJB	Checked: JAB
Issue: CONSTRUCTION DOCUMENTS	

FILTER AREA IMPROVEMENT DETAILS

SP-F4

Water's Edge Aquatic Design © 2020