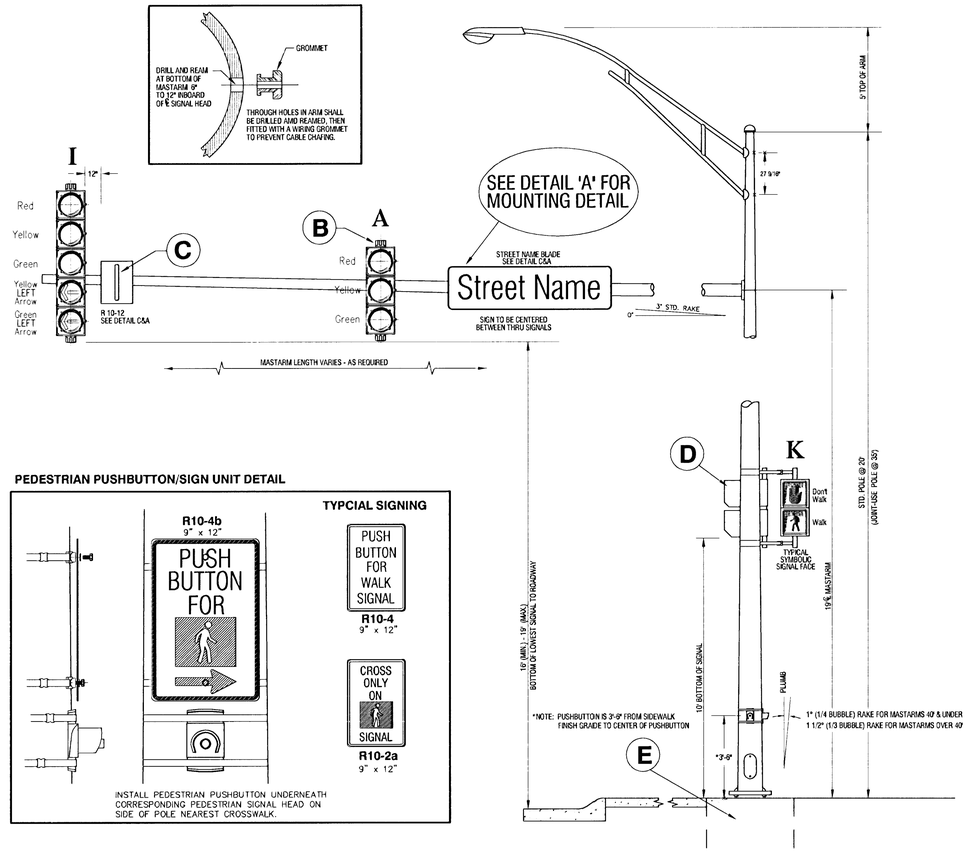

PEDESTRIAN PUSHBUTTON/SIGN UNIT DETAIL

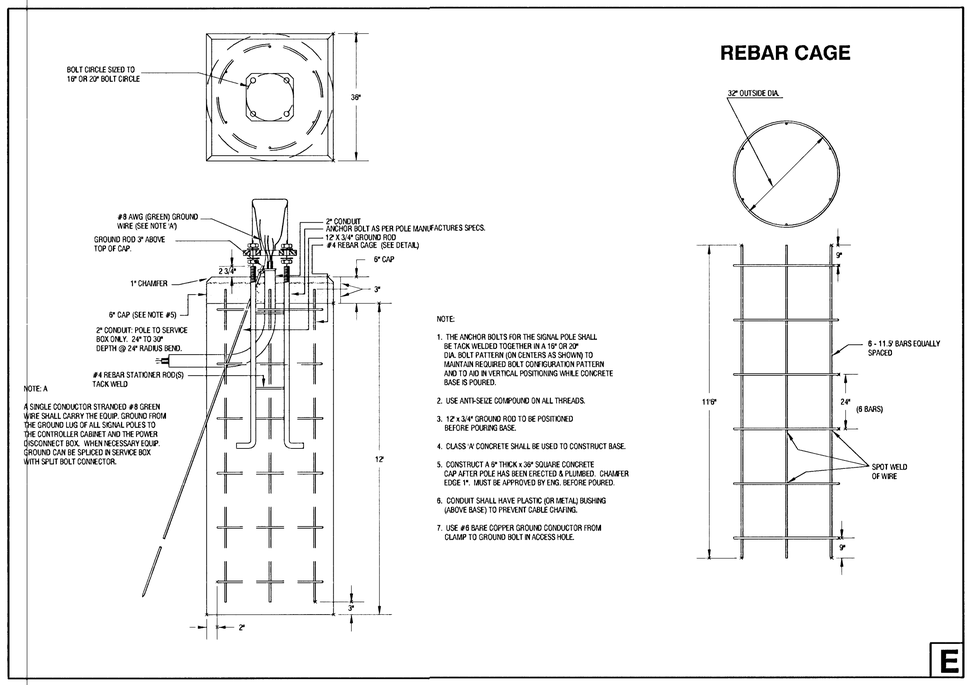

REBAR CAGE

STANDARD SIGNING

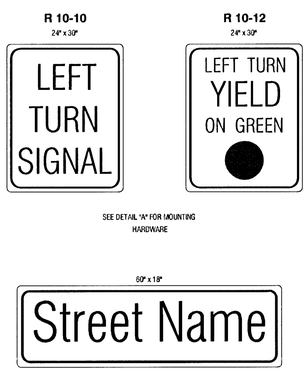

TYPE III SIDE-OF-POLE MOUNTING BRACKET ASSEMBLY

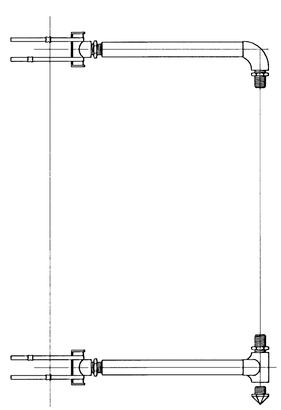

BANDED SIGN MOUNTING BRACKET DETAIL

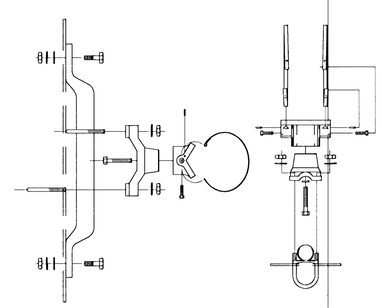

TYPE I SIGNAL MOUNTING BRACKET ASSEMBLY DETAIL

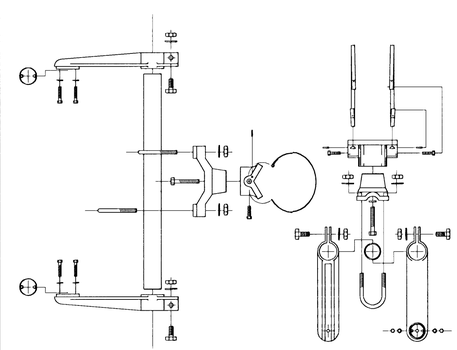

TYPE II SIGNAL MOUNTING BRACKET ASSEMBLY (SIDE-OF-POLE)

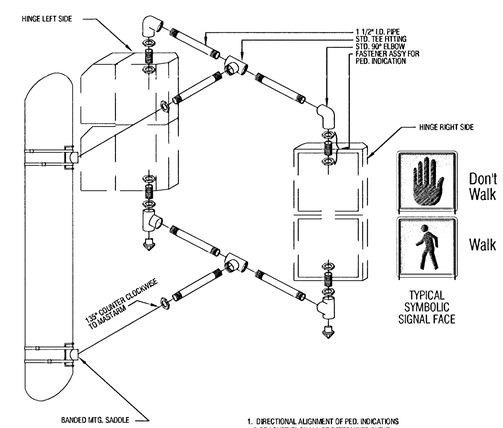

1. DIRECTIONAL ALIGNMENT OF PED. INDICATIONS & BRACKET(S) SHALL BE DETERMINED IN THE FIELD BY THE ENGINEER.
2. THROUGH HOLES IN THE POLE SHALL BE DRILLED AND WELL REAMED TO PREVENT CABLE CHAFING.
3. HINGE PEDESTRIAN SIGNAL DOORS AWAY FROM POLE.

D

PROJECT NUMBER			SHEET NAME	ENGINEERING DIRECTORY	
City Of Wichita			SSP-DTL	F:\\CENTRAL\TRAFFIC	
DESIGN	DRAWN	APPROVED	DATE	SCALE	BAUGHMAN NO
SONNY	STAFF		FEB 2002	NONE	99-09-E463

CAPITAL IMPROVEMENT PROJECT
STEEL SIGNAL POLE ASSEMBLY DETAILS
CENTRAL AVENUE - TYLER to WOODCHUCK

BAUGHMAN COMPANY, P.A.
ENGINEERING, SURVEYING, & PLANNING
316-262-7271 • 315 ELLIS • WICHITA, KANSAS 67211

SHEET 27 OF 42