| FHWA REGION NO. | STATE | PROJECT NO. | YEAR | SHEET NO. | TOTAL SHEETS |
|---|---|---|---|---|---|
| 7 | KANSAS | | 19 | 25 | 47 |

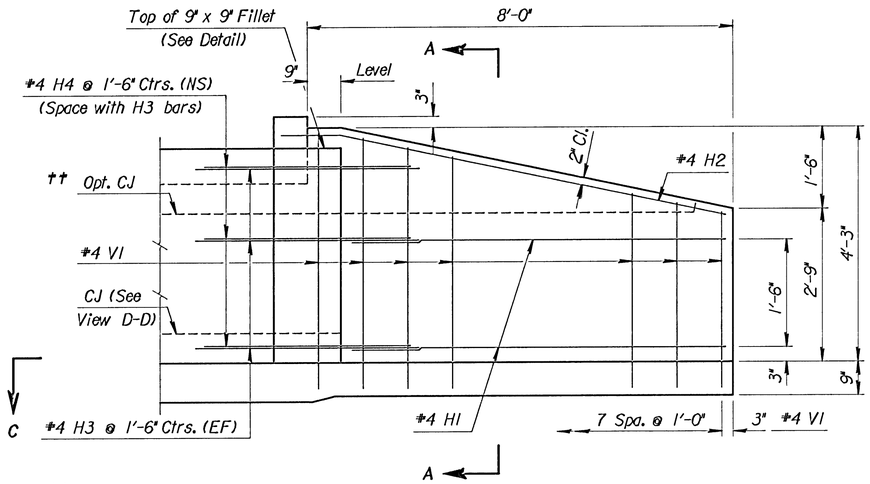


†† See RCB Details for location of construction joint.

ELEVATION OF WINGWALL

(Backface Shown)

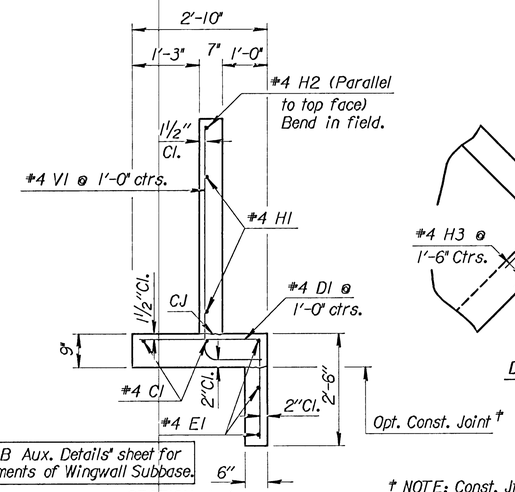


See "RCB Aux. Details" sheet for requirements of Wingwall Subbase.

SECTION A-A

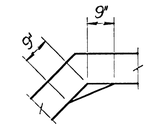


Fillet Detail

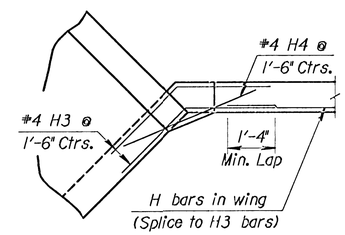


DETAIL OF 9" x 9" FILLET

(Plan View)

† NOTE: Const. Jt. may be used at Contractor's option when approved by the Engineer. DI bars or mesh may be spliced thus: Minimum overlap shall be 1'-3". No increase in quantities or cost shall be allowed when Contractor elects this option.

## GENERAL NOTES

UNIT STRESSES: Class AAA Concrete; f'c = 4,000 p.s.i.
Reinforcing Steel; fy = 60,000 p.s.i.

CONCRETE: Class AAA Concrete shall be used throughout. Bevel all exposed edges with a ¾ inch triangular moulding.

REINFORCING: All reinforcing shall conform to ASTM A615, Grade 60. Welded Wire Fabric shall conform to ASTM A185. All dimensions relative to reinforcing steel shall be to center-line of bar unless otherwise noted.

QUANTITIES: Wingwall Quantities include all quantities outside the neat lines of the box, excluding the hubguard.

APRON: A 5" concrete slab shall be constructed between the downstream wings in locations subject to scour only when specified on the plans or by the Engineer. Wire Reinforcing mesh shall be electrically welded and shall be composed of 6 x 5-W1.4 x W1.4 welded wire fabric and shall be classified as pounds of reinforcing.

FOUNDATION AND BACKFILL MATERIAL: Soils judged as high plasticity clays, fat clays, expansive clays, or organic clays are unsuitable for foundation and/or backfill material for wingwalls and will not be used. Where these conditions exist, Foundation Stabiliation and/or Granular Backfill (Wingwalls) shall be used as determined by the Engineer. See "RCB Auxiliary Details" sheet for additional details.

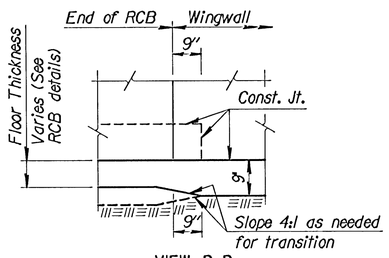


VIEW D-D

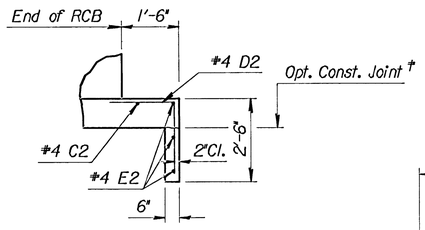


SECTION E-E

NOTE:
EF = Each Face
NS = Near Side
FS = Far Side
CJ = Const. Joint

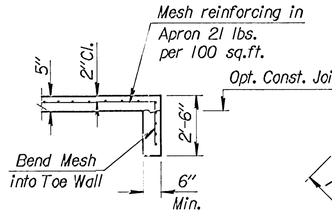


SECTION B-B

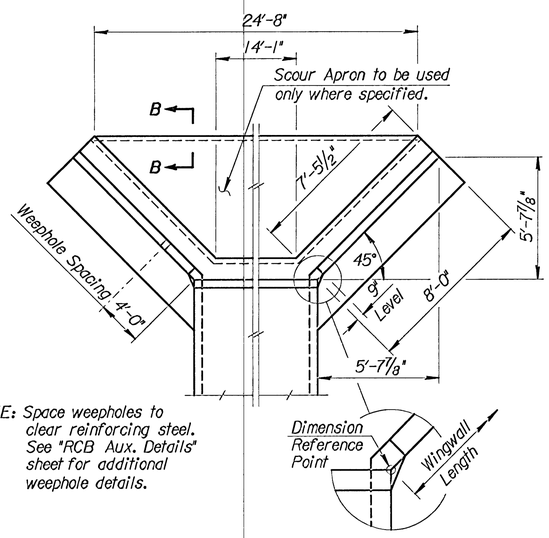


NOTE: Space weepholes to clear reinforcing steel. See "RCB Aux. Details" sheet for additional weephole details.

WING DIMENSIONS FOR NORMAL BOX

(3½:1 Embankment Slope)

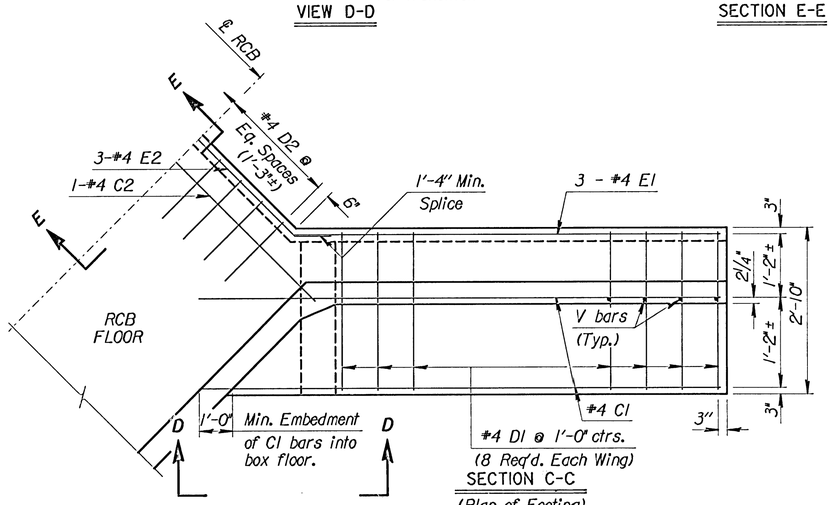


SECTION C-C

(Plan of Footing)

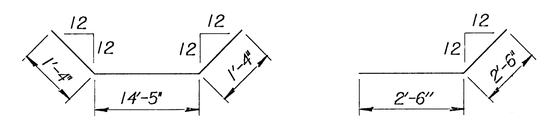


E2 H3

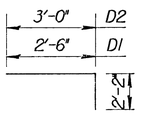


DI, D2

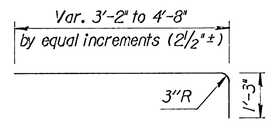


VI

(2 Req'd., each length)

BENDING DIAGRAM

(All dimensions are out to out of bars.)

Quantities listed below are included in the Summary of Quantities shown on the RCB details.

| WINGWALL QUANTITIES (One End Only) | | |
|---|---|---|
| Class AAA Concrete: | | |
| Wingwalls | 3.99 | CY. |
| Apron | 2.53 | CY. |
| Soil Saver | 0.00 | CY. |
| Reinforcing Steel | 326.87 | Lbs. |
| Welded Wire Fabric | 34.42 | Lbs. |

NOTE: Reinforcing Bar List is for both wings at one end of box only.

| | | #4CI | #4DI | #4EI | #4C2 | #4D2 | #4E2 | #4VI | #4HI | #4H2 | #4H3 | #4H4 |
|---|---|---|---|---|---|---|---|---|---|---|---|---|
| 0° Skew | No. | 4 | 16* | 6 | 1 | 11* | 3* | 16 | 4 | 2 | 12* | 6 |
| | Length | 9'-10" | 4'-8" | 7'-3" | 15'-3" | 5'-2" | 17'-1" | * | 6'-10" | 8'-9" | 5'-0" | 3'-6" |

* See Bending Diagram

| NO. | DATE | REVISIONS | BY | APP'D |
|---|---|---|---|---|
| | | | | |

KANSAS DEPARTMENT OF TRANSPORTATION

Sta.

FLARED WINGWALLS
3 FT. RISE (0°SKEW)

25/47

BR 10.00.03 SEDGWICK CO.

| | | | | | |
|---|---|---|---|---|---|
| FHWA APPROVAL | | 6-5-91 | APP'D | | KENNETH F. HURST |
| DESIGNED | | DETAILED | QUANTITIES | | TRACED |
| DESIGN CK. | | DETAIL CK. | QUAN. CK. | | TRACE CK. |

VERSION: 5.1.0 COMPILED: 02/09/99

ORIG. FROM BRJAD.

| PROJ. | CO. CHECK | |
|---|---|---|
| DESIGN | DATE | DATE |
| DETAIL | DATE | DATE |
| QUANTITIES | DATE | DATE |
| TRACING | DATE | DATE |
| RETRACED | DATE | DATE |

thorsell
F:\b273.dgn
10-AUG-2001 10:53
View= PLOT10