FHWA REGION NO.	STATE	PROJECT NO.	YEAR	SHEET NO.	TOTAL SHEETS
7	KANSAS	87U-1247-01	1992	28	79

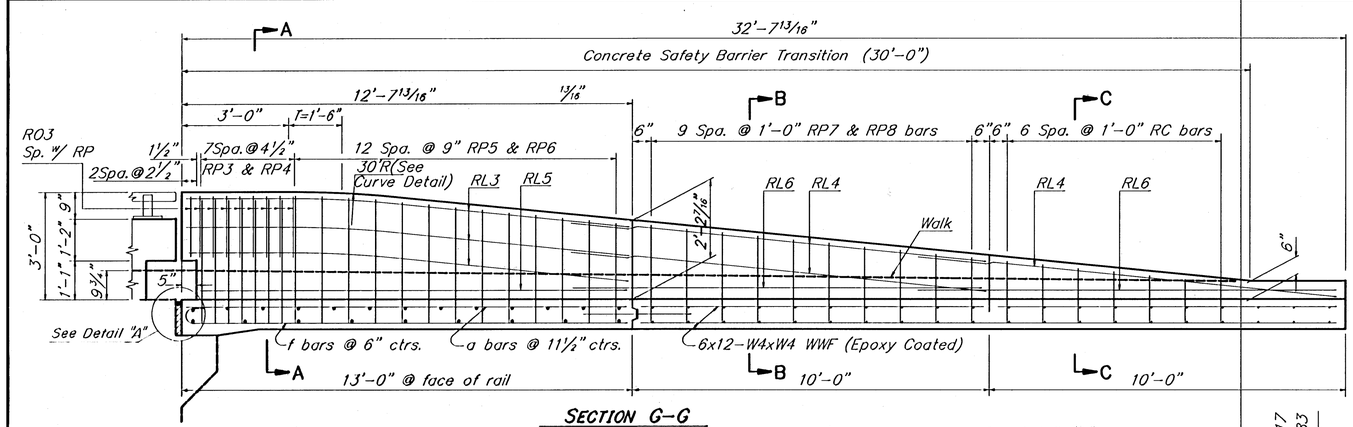

SECTION G-G

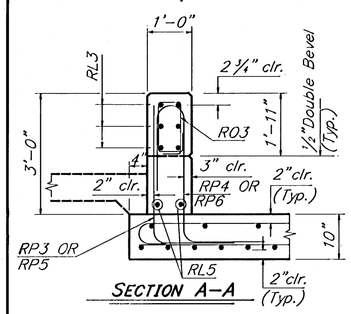

SECTION A-A

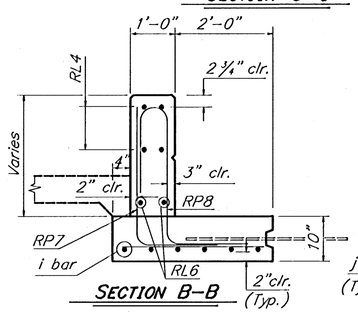

SECTION B-B

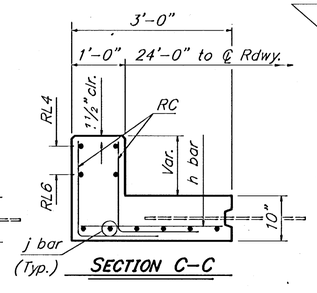

SECTION C-C

SECTION F-F

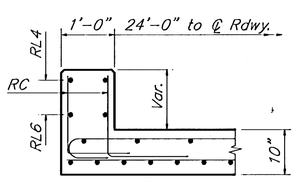

SECTION C'-C'

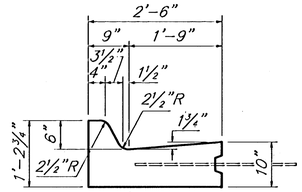

SECTION D-D

(C&G Type I Spec.)

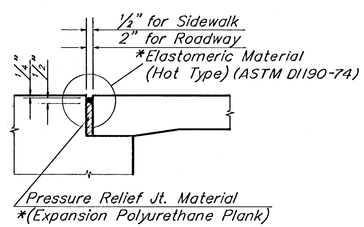

DETAIL A

* Subsidiary to "Concrete Pavement (10" unit.)(AE)"

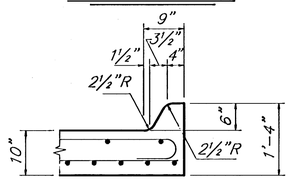

SECTION E-E

6" Edge Curb (Monolithic)

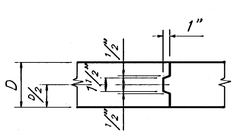

KEYWAY DETAILS

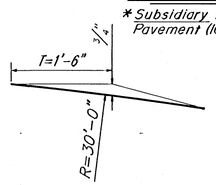

CURVE DETAIL

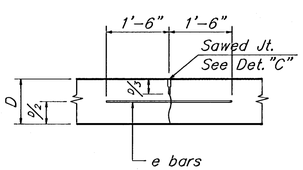

SAWED JOINT
LONG. OR TRANS.

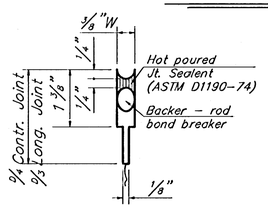

DETAIL "C"

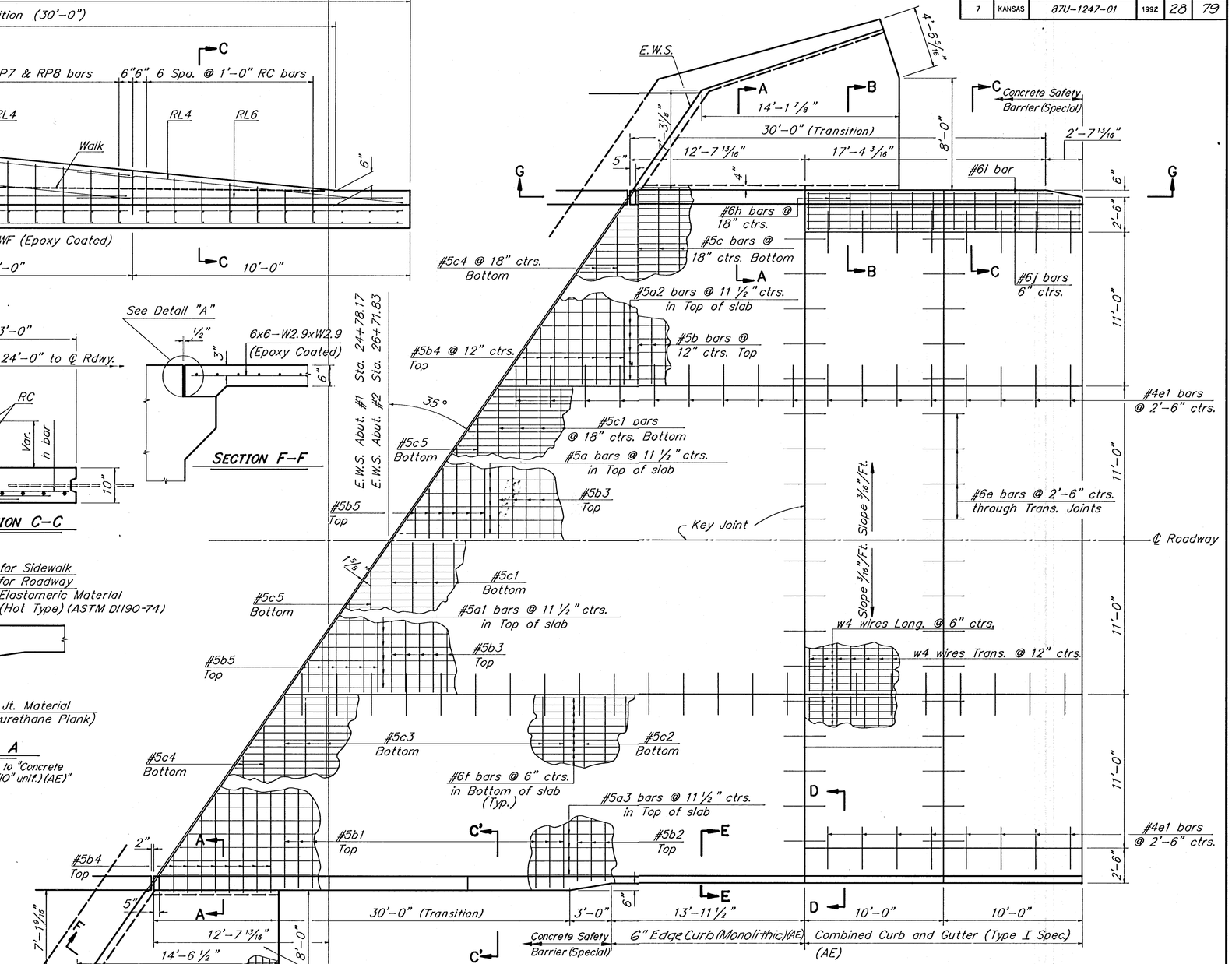

PLAN

Concrete Pavement (6"Unif.)(AE)
Welded Wire Fabric Reinforcing (Typ.)
6x6-W2.9xW2.9 (Epoxy Coated)
Sidewalk Slab (Excavation, Concrete, Rebar, Material, and Labor) shall be considered subsidiary to the bid item "Concrete Pavement (6" Uniform)(AE)".

NOTE:

Special Concrete Pavement Approach shall be paid as sq. yds. of concrete pavement (10" unit.)(AE) and includes all work and materials required to construct the approach slab as shown on Special Concrete Approach Details Sheet.

Concrete Safety Barrier shall be paid for as lin. ft. of Concrete Safety Barrier (Special)(AE) includes all work and material required to build the barrier as shown on this sheet.

All concrete shall be Class AAA (AE).

All reinforcing shall be Grade 60 — epoxy coated.

See Sheet 29 for Approach Slab Details II.

CITY OF WICHITA

GEORGE WASHINGTON BLVD. BRIDGE OVER GYPSUM CREEK

SPECIAL CONCRETE APPROACH I

CITY OF WICHITA PROJ.NO. 472-82156

Booker ASSOCIATES INC. OF KANSAS
Wichita Kansas

SCALE	DATE	DWG. NO.
—	June, 1992	K-9331

SURV. — | PLOT CADD | DES. A.H.\T.P. | DR. R.C.\A.H. | TR. — | R.G. | APP. S.K.B.

\K9331\APPROACH
SCALE 1"=4'(1/4")