FHWA REGION NO.	STATE	PROJECT NO.	YEAR	SHEET NO.	TOTAL SHEETS
7	KANSAS	87U-1247-01	1992	38	79

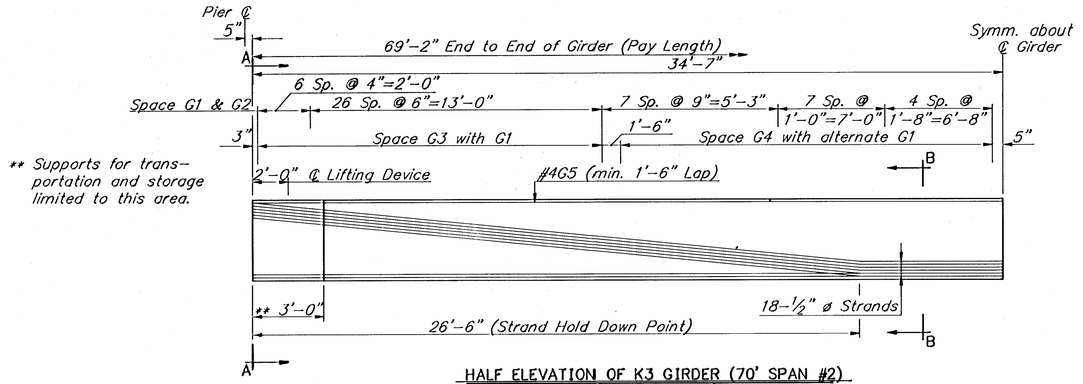

HALF ELEVATION OF K3 GIRDER (70' SPAN #2)
7 Req'd.-18.9 Tons/Girder

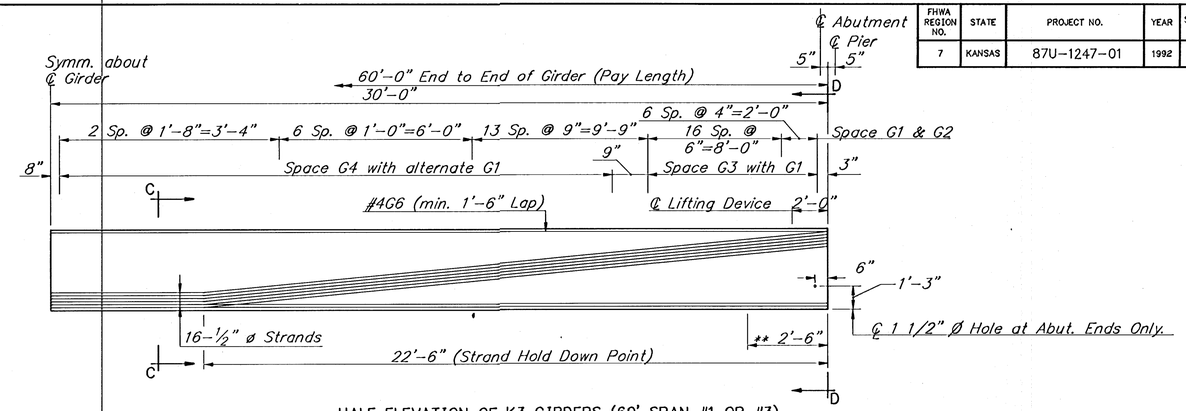

HALF ELEVATION OF K3 GIRDERS (60' SPAN #1 OR #3)
14 Req'd.-16.4 Tons/Girder

BILL OF REINFORCING STEEL (FOR INFO. ONLY)										
	60'-0" Girder (1 Listed-14 Req'd.)					69'-2" GIRDER (1 Listed-7 Req'd.)				
MARK	G1 ◢	G2 †	G3 †	G4 †	G6	G1 ◢	G2 †	G3 †	G4 †	G5
NO.	176	88	46	22	8	204	102	66	18	8
SIZE	4	4	3	3	4	4	4	3	3	4
LENGTH	5'-5"	2'-1"	6'-1"	2'-4"	30'-9"	5'-5"	2'-1"	6'-1"	2'-4"	35'-4"

Reinforcing shall be grade 60, unless marked † =Grade 40
◢ Epoxy coated
(Note: G5 and G6 bars shall have 1'-6" min. lap.)

SUMMARY OF QUANTITIES			
	ITEM	UNIT	TOTAL
	Prestressed Concrete Beam (K3)(60'-0")(14 each)	Lin Ft.	840.00
	Prestressed Concrete Beams (K3) (69'-2")(7 each)	Lin Ft.	484.17
	Following Approximate Quantities are for information only. (Total 21 Beams)		
Subsidiary to Pres. Concrete Girder (K3)	Concrete in beams (FC=5,000 P.S.I.)	Cu. Yds.	178.8
	Prestressing steel A416 1/2" Ø (Low Relaxation)	Lin. Ft.	23,300
	Reinforcing steel (Gr. 60)	Lbs.	17,710
	Reinforcing steel (Gr. 40)	Lbs.	5,620
	Bearing Pads 10" x 3/4" x 1'-10" (DURO 60)	Each	28
	Bearing Pads 8" x 3/4" x 1'-10" (DURO 60)	Each	14

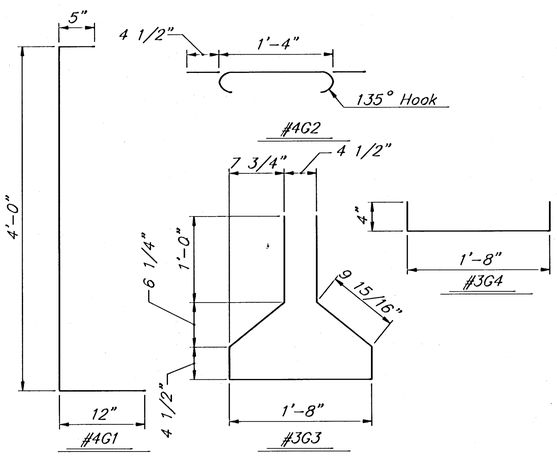

BENDING DIAGRAMS
(All dimensions are out to out of bars.)

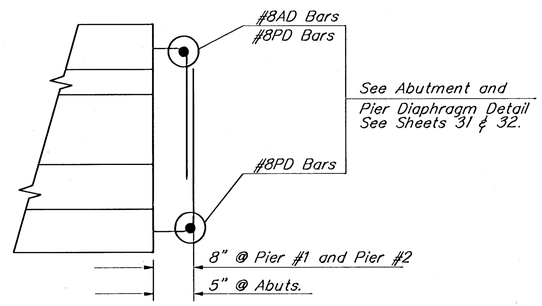

NOTE:
There shall be 4 strands extended 3'-3" from the bottom ends of beams at abutments, and 6 strands extended 3'-3" from the bottom ends of beams at all piers. Two additional strands shall be extended from the top of all the beams at both ends. See Girder sections for strand to extension location. They shall produce no lateral eccentricity. Strands not extended shall be cut flush.

STRAND EXTENSION DETAIL

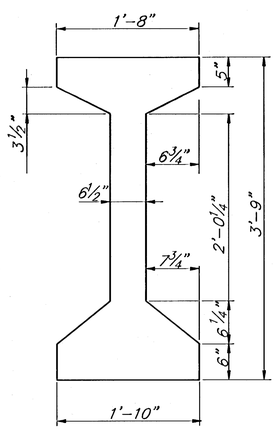

TYPICAL SECTION

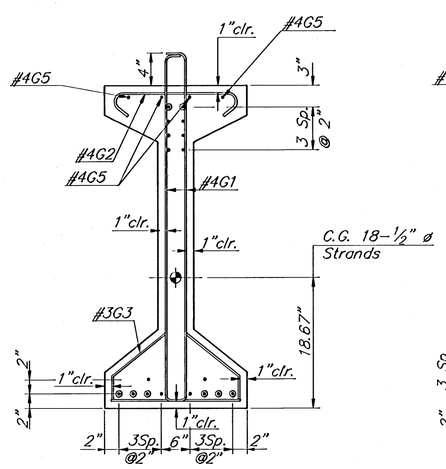

SECTION A-A

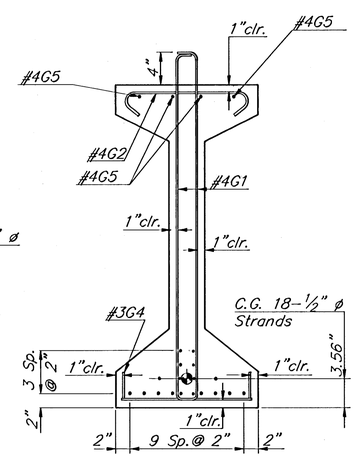

SECTION B-B

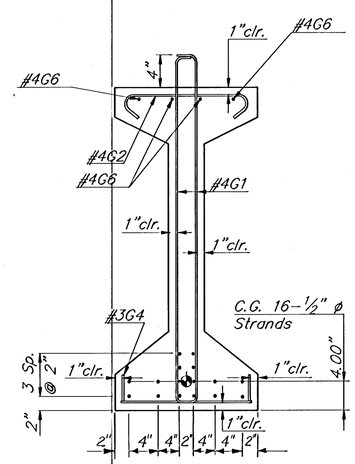

SECTION C-C

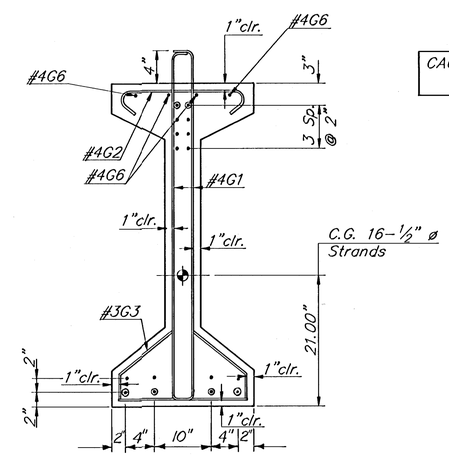

SECTION D-D

Note: ◉——► Strands to be extended at ends

CAUTION: See Sheet 31 and sheet 34 for proper orientation of skew for the formed holes.

Girder weights shown are based on 150 #/Cu.Ft. (Approximate).

See Sheet 34 for Framing Plan.
See Sheet 34 for Bearing Pad Details.
See Sheet 24 for Notes.

CITY OF WICHITA
GEORGE WASHINGTON BLVD. BRIDGE OVER GYPSUM CREEK

K3 GIRDER DETAIL

CITY OF WICHITA PROJ. NO.: 472-82156

Booker ASSOCIATES INC. OF KANSAS
Wichita Kansas

SCALE ——— DATE June, 1992 DWG. NO. K9331

SURV. — PLOT CADD — DES. RG./A.H. — DR. G.B. — TR. — CKD. R.G. — APP. S.K.B.

\K9331BR\GIRDER1
SCALE 1"=10'