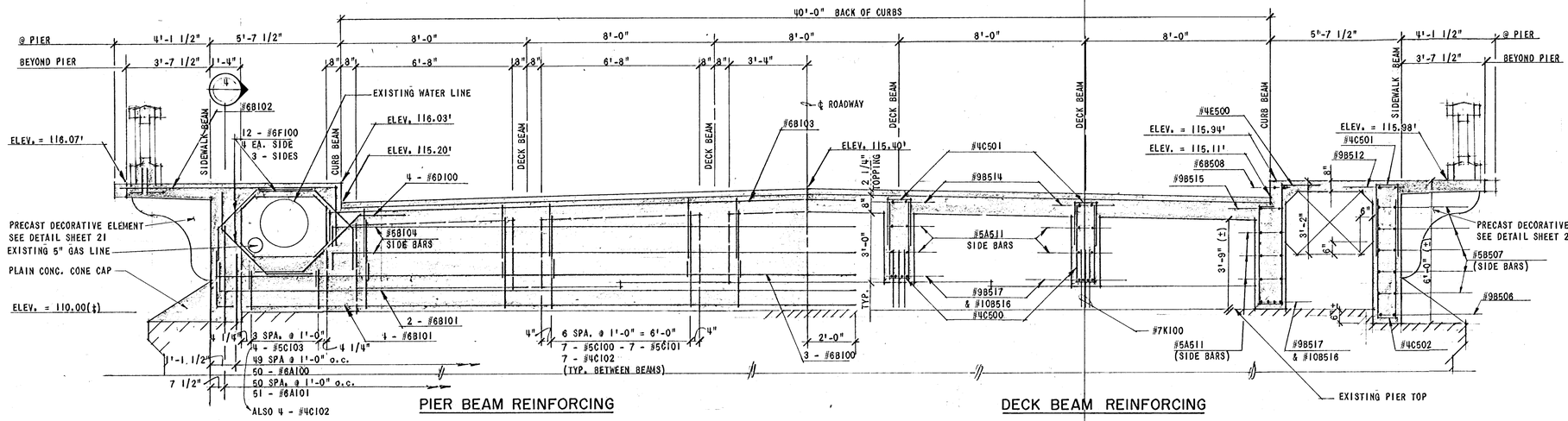

PIER BEAM REINFORCING

DECK BEAM REINFORCING

BRIDGE CROSS-SECTION AT PIER (1/17)

3/8" = 1'-0"

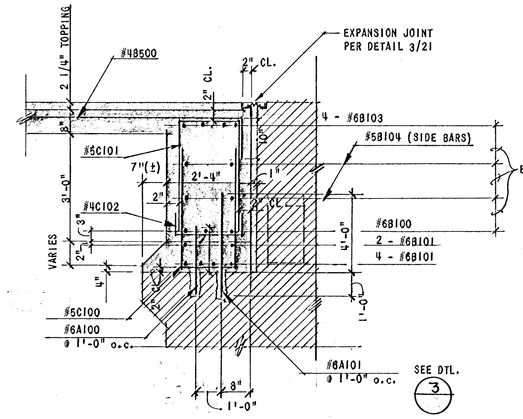

PIER BEAM AT DECK SLAB (7/17)

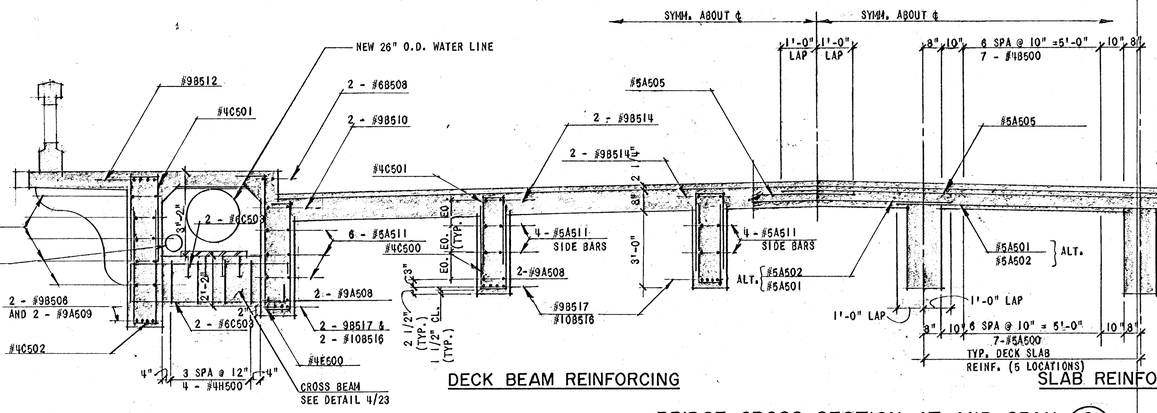

DECK BEAM REINFORCING

SLAB REINFORCING

BRIDGE CROSS-SECTION AT MID-SPAN (2/17)

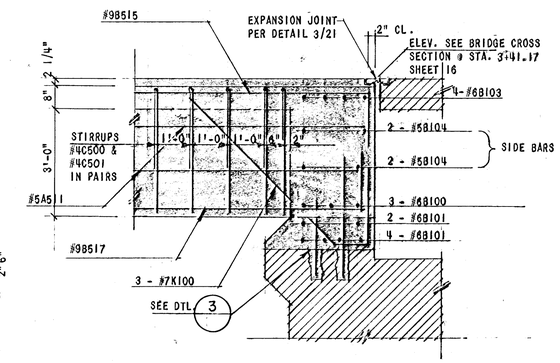

PIER BEAM AT DECK BEAM (8/17)

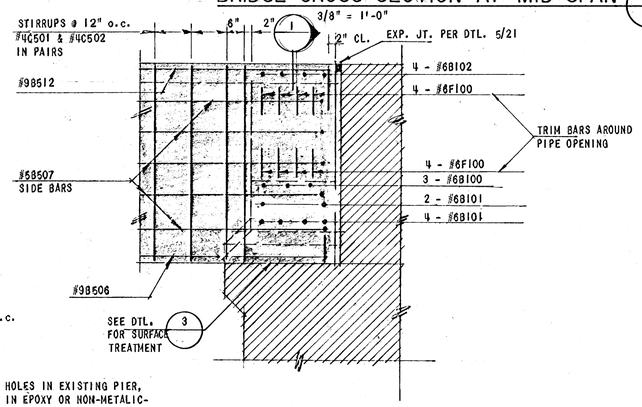

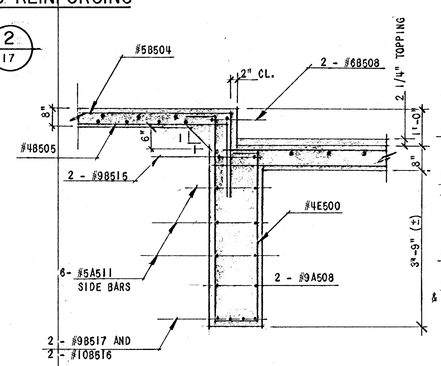

BEAM SECTION AT CURB (5/17)

1/2" = 1'-0"

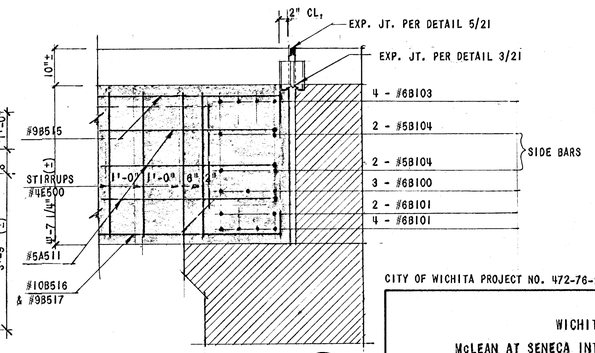

PIER BEAM AT CURB BEAM (6/17)

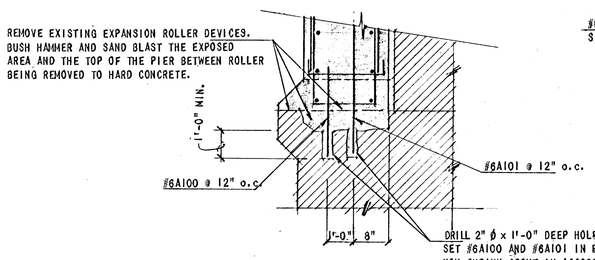

NEW PIER BEAM TO EXISTING PIER (3)

PIER BEAM AT SIDEWALK BEAM (4/17)

CITY OF WICHITA PROJECT NO. 472-76-245-81199-000-000-001

WICHITA, KANSAS

McLEAN AT SENECA INTERSECTION IMPROVEMENTS

BRIDGE CROSS SECTIONS AND BEAM DETAILS

REVISION	DATE	BY

DESIGN	DRAWN	DATE:
GWJ	RDS	OCT. 1983

GENE W. JOHNSON LICENSED 5200 KANSAS PROFESSIONAL ENGINEER

WILSON & COMPANY ENGINEERS & ARCHITECTS
WICHITA — KANSAS

FILE NO. 82-324A

SHEET NO. 18 OF 37