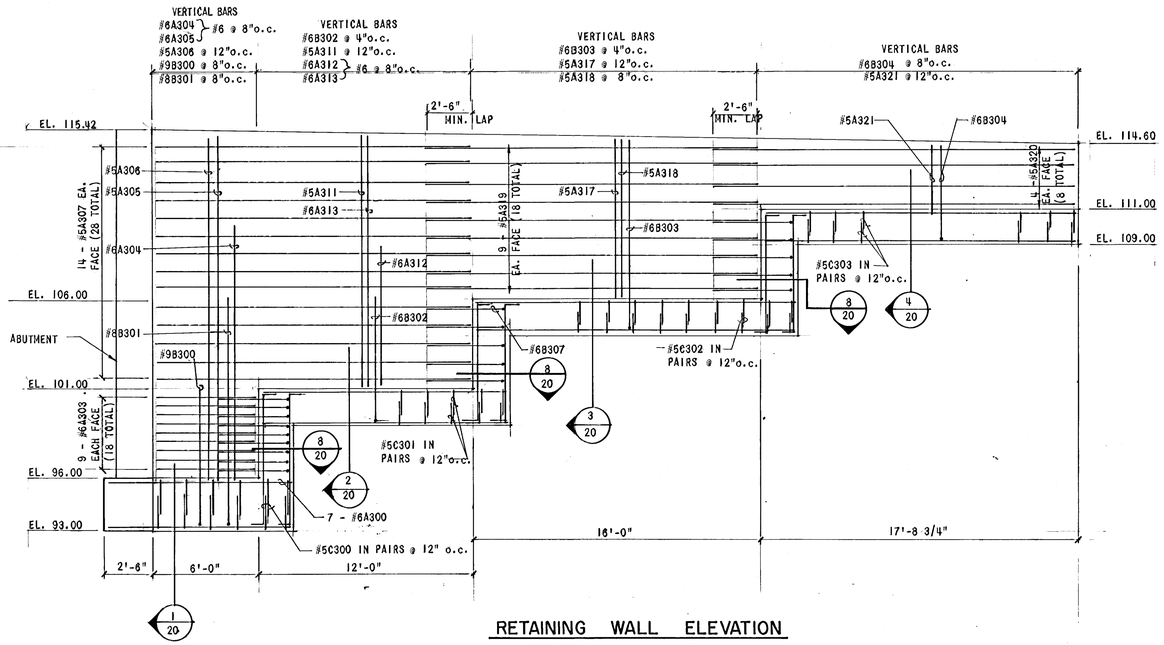

RETAINING WALL ELEVATION

WEST SIDE (LOOKING EAST)

SCALE:
1/4" = 1'-0"

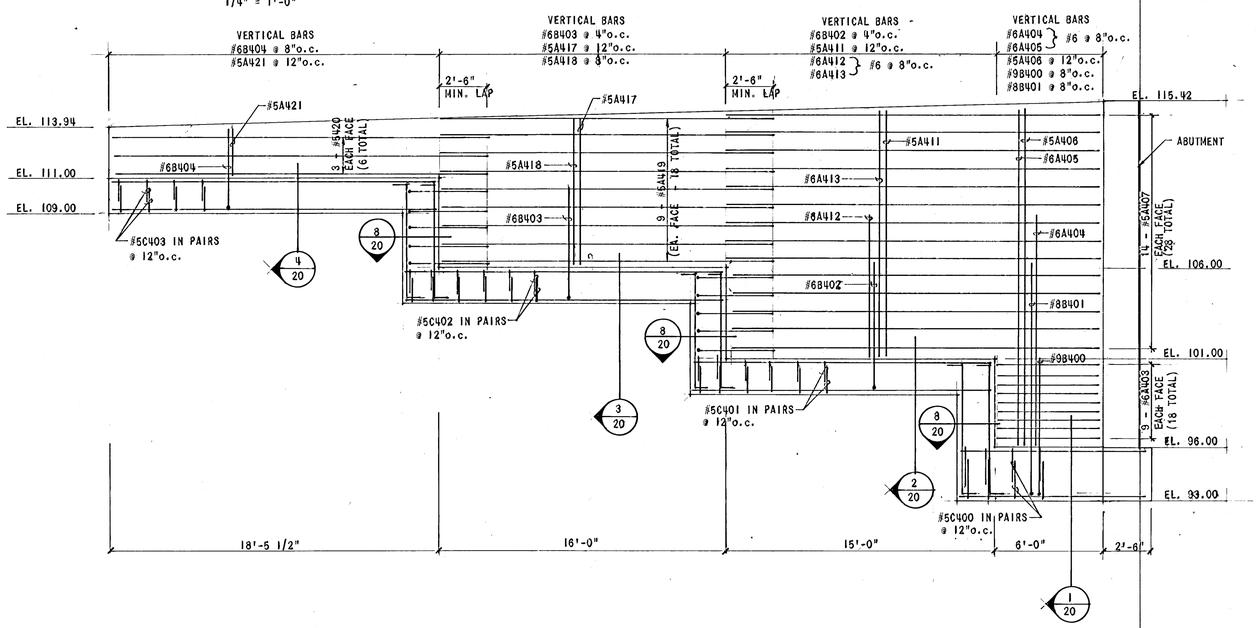

SCALE:
1/4" = 1'-0"

RETAINING WALL ELEVATION

EAST SIDE (LOOKING WEST)

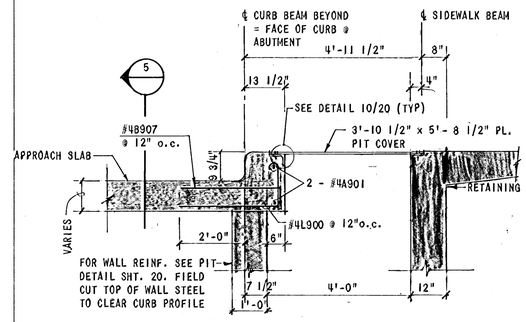

SECTION 1/20

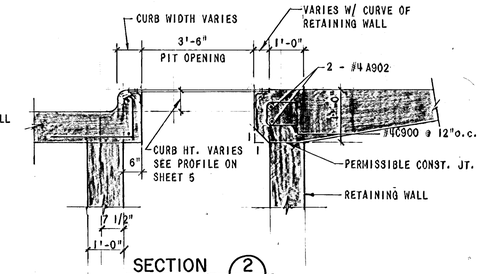

SECTION 2/20

WATER LINE PIT DETAILS

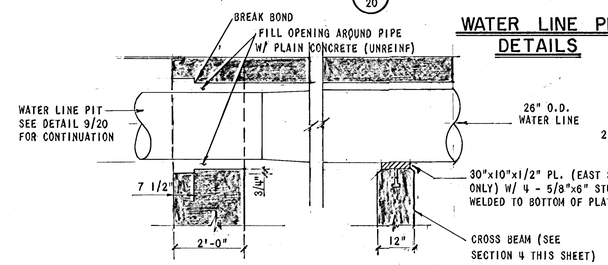

WATER LINE AT ABUTMENT 3/19

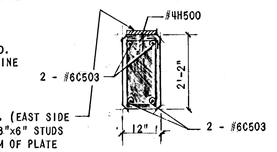

CROSS BEAM SECTION 4

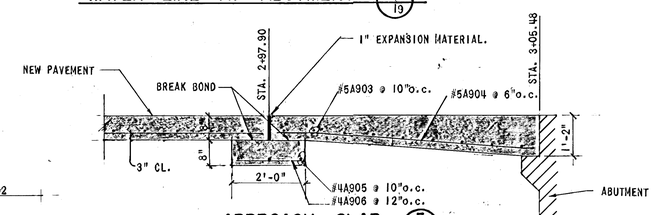

APPROACH SLAB 5

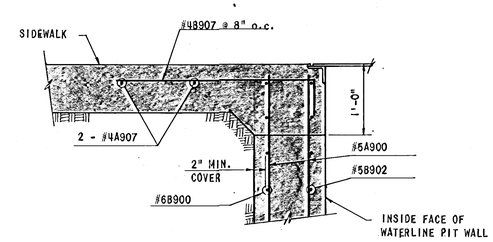

DETAIL 6/20

CITY OF WICHITA PROJECT NO. 472-76-245-81199-000-000-001

WICHITA, KANSAS

MCLEAN AT SENECA INTERSECTION IMPROVEMENTS

MISCELLANEOUS DETAILS

REVISION	DATE	BY

DESIGN	DRAWN
GWJ	GWF

GENE W. JOHNSON LICENSED 5200 KANSAS PROFESSIONAL ENGINEER

WILSON & COMPANY ENGINEERS & ARCHITECTS
WICHITA — KANSAS

DATE: OCT. 1983
FILE NO. 82-324A
SHEET NO. 23 OF 37