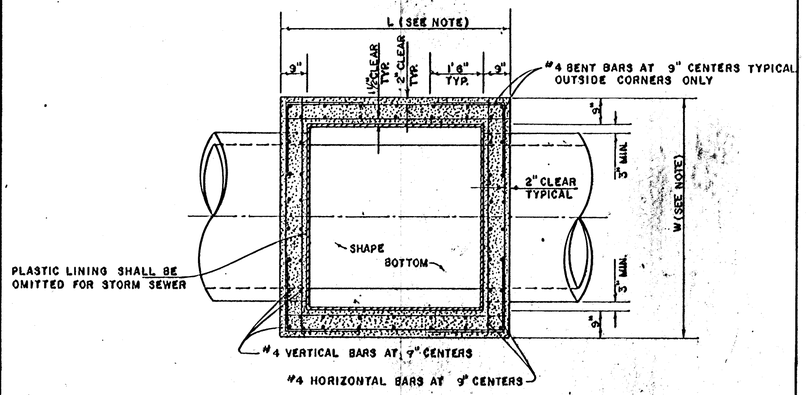

TOP VIEW

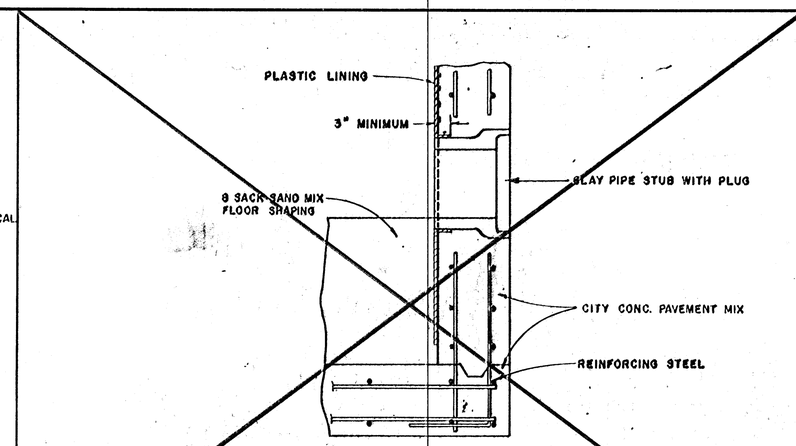

V.C.P. CONNECTION DETAIL
SANITARY SEWER ONLY

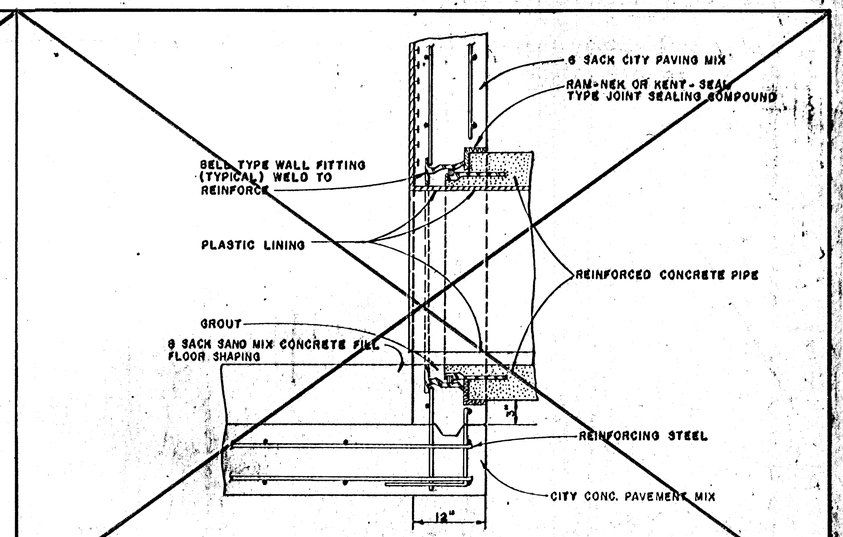

R.C.P. CONNECTION DETAIL
SANITARY SEWER ONLY

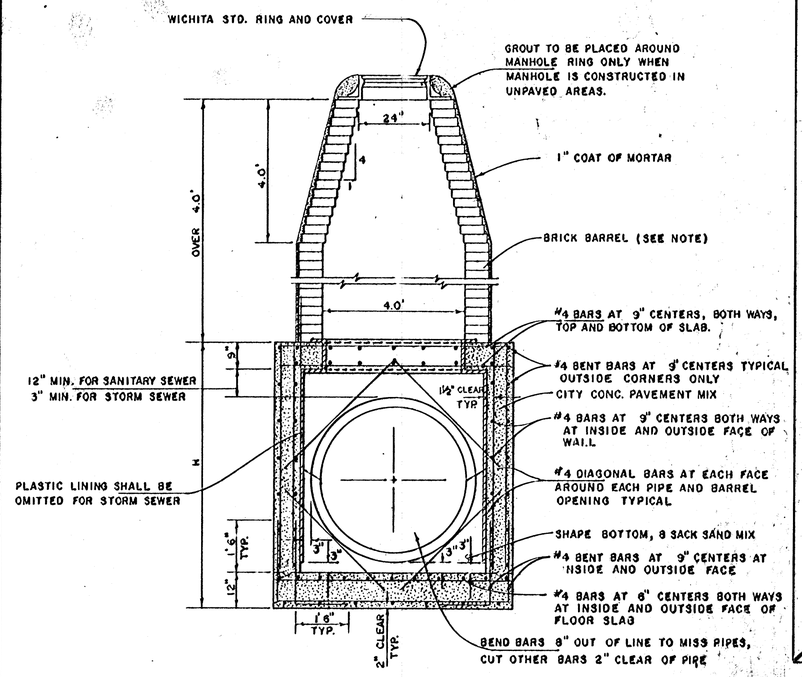

REINFORCED CONCRETE MANHOLE
DEPTH OF STACK: OVER 4.0'
SCALE 1" = 2'

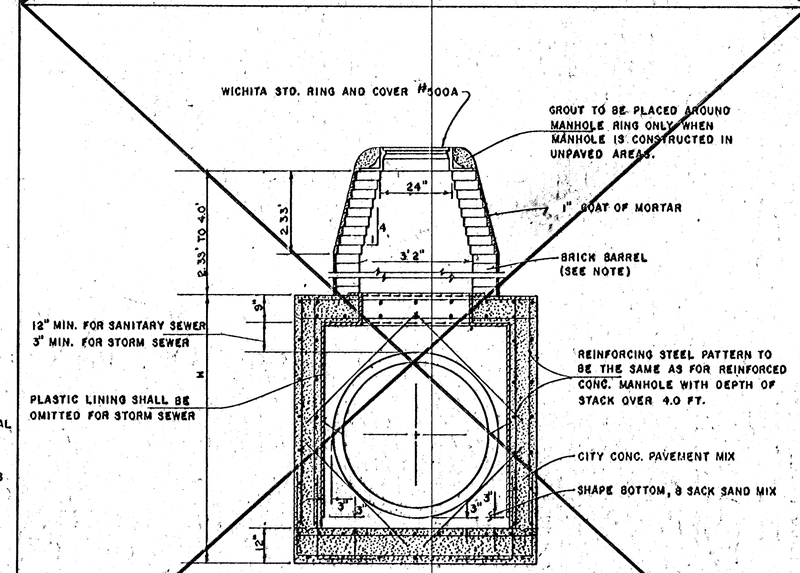

REINFORCED CONCRETE MANHOLE
DEPTH OF STACK: 2.33' TO 4.0'
SCALE 1" = 2'

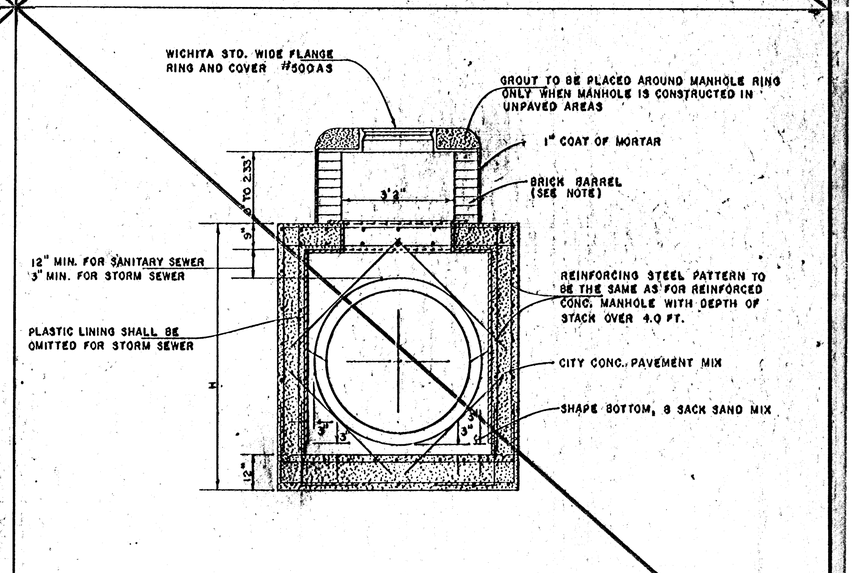

REINFORCED CONCRETE MANHOLE
DEPTH OF STACK: 0' TO 2.33'
SCALE 1" = 2'

NOTE:
BRICK BARRELS LESS THEN 16' DEEP SHALL HAVE 8" WALLS EXCEPT WHEN LOCATED WITHIN PUBLIC STREET OR ALLEY PAVEMENT THEN THE WALL SHALL BE 12" BRICK. BARRELS MORE THEN 16' DEEP SHALL HAVE 12" WALLS. THE "L" AND "W" DIMENSIONS SHALL BE A MINIMUM OF 5'6" FOR BRICK BARRELS WITH 8" WALLS AND 6'2" FOR BRICK BARRELS WITH 12" WALLS.

CITY OF WICHITA PROJECT NO. 472-76-246-81199-000-000-001

STANDARD DETAILS
REINFORCED CONCRETE MANHOLES
CITY OF WICHITA

APRIL 1978 REVISED APRIL, 1980