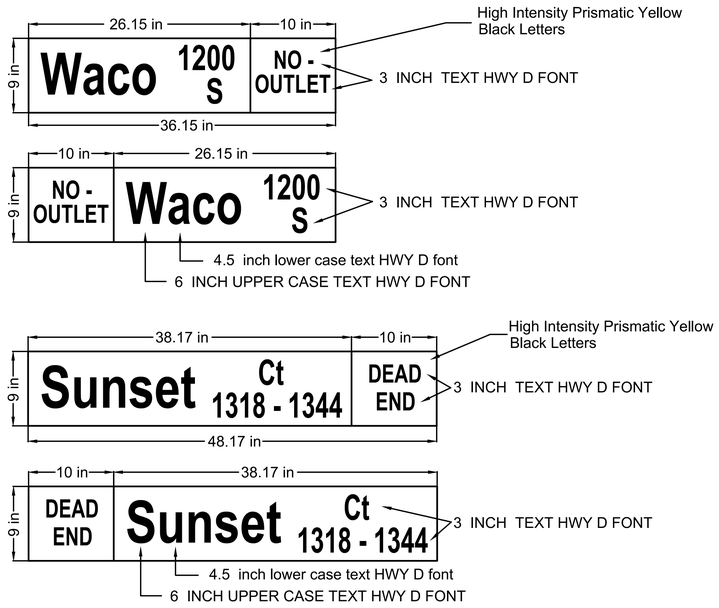

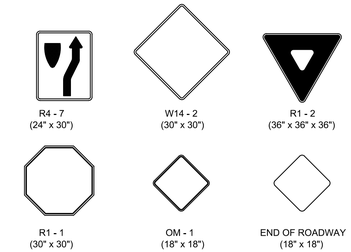

* IN NO CASE SHALL THE SPECIFICATIONS BE LESS THAN REQUIRED BY THE CURRENT MUTCD.

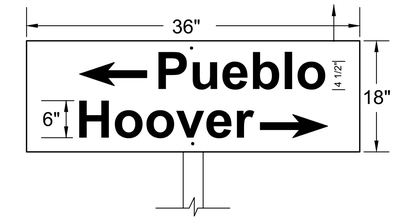

FLAT PLATE STREET NAME SIGN

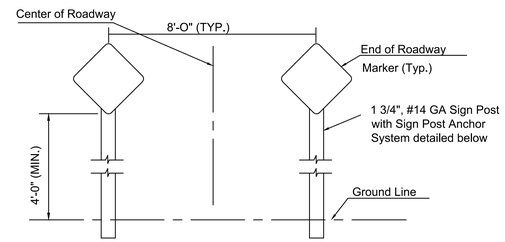

TYPICAL END OF ROADWAY SIGN MOUNTING INSTALLATION

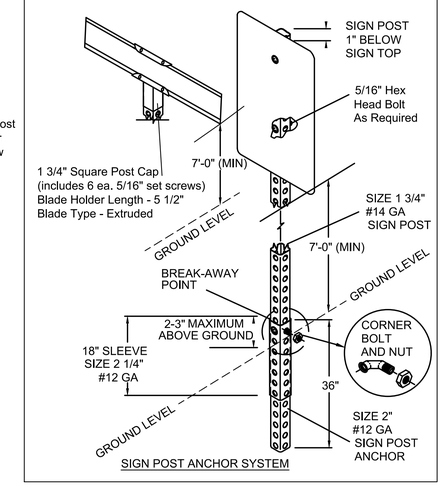

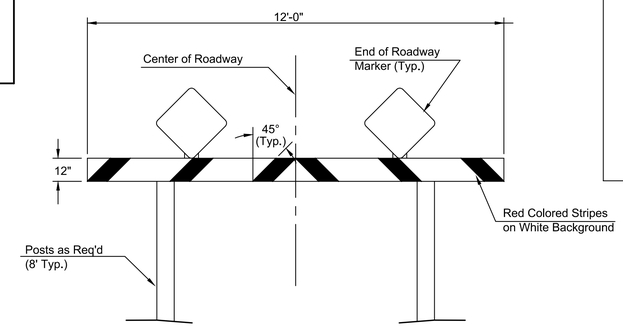

TYPE I BARRICADE DETAIL W/ E.O.R. MARKERS

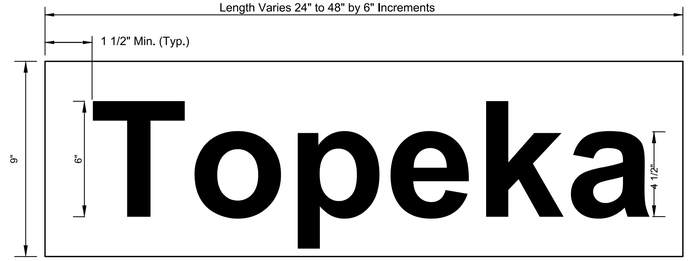

DETAIL A
9" STANDARD

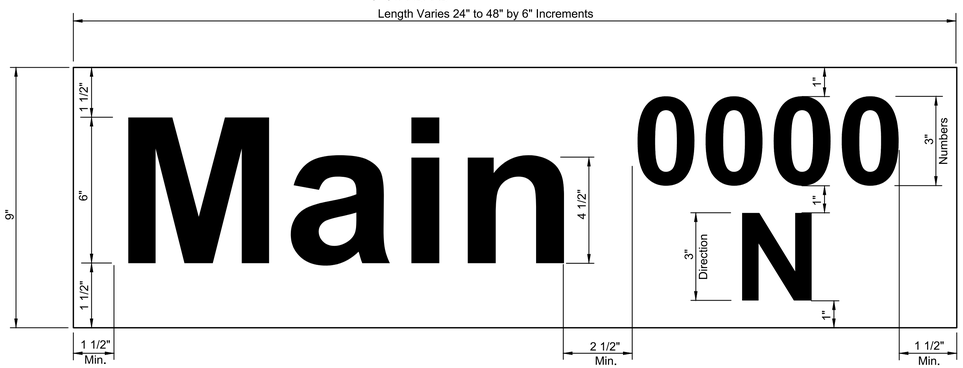

DETAIL B
9" METRO

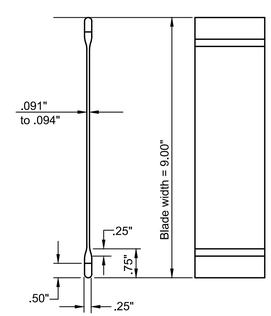

STREET NAME SIGN
BLADE DETAILS

STREET NAME	NO. BLADES REQ'D	
	9" STD.	9" METRO

SIGN ASSEMBLY TABLE

STATION	OFFSET	SIGN	QUANTITY*
49+69.80	*25.0' LT*	*R2-1*	*1*