FHWA REGION NO.	STATE	PROJECT NO.	YEAR	SHEET NO.	TOTAL SHEETS
7	KANSAS		198	23	38

TRAFFIC CONTROL SIGNS & SIGN POSTS

Station	Location from ℄	R1-1	S-1	R2-1	R3-7R	R8-3a	①	②	③	④	⑤	R5-1	R1-2	R3-1L	R5-4	R6-1R				Sign Post Length: Breakaway Length 1¾" x 1¾" x Varies	Sign Post Length: "U"-Channel
-2+50.00	10RT																				
6+50.00	33RT									1											
7+25.00	38RT				1																
7+50.00	23LT														1						
7+75.00	38RT														1						
8+40.00	30RT				1																
9+57.50	18RT											1				2					
9+88.00	17LT											1				2					
3+50.00	38.88LT												1								
4+34.00	℄													1							
11+00.00	55LT										1										
12+00.00	55LT										1										
Total																					

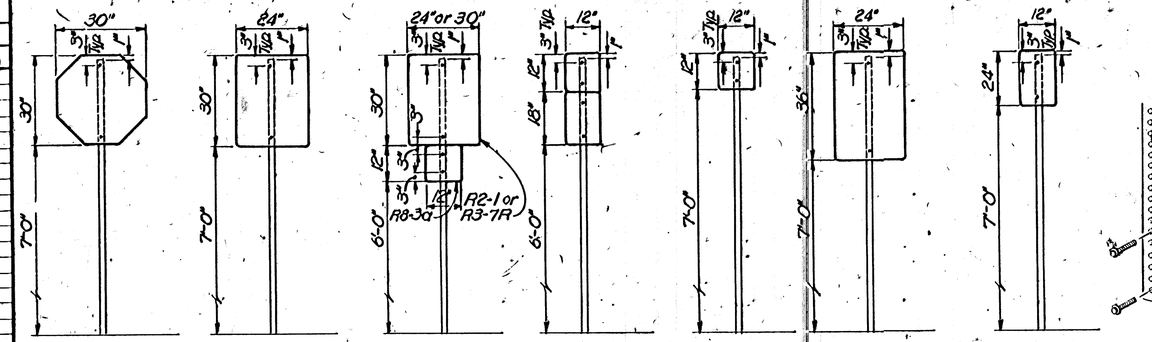

SIGN-MOUNTING DETAILS

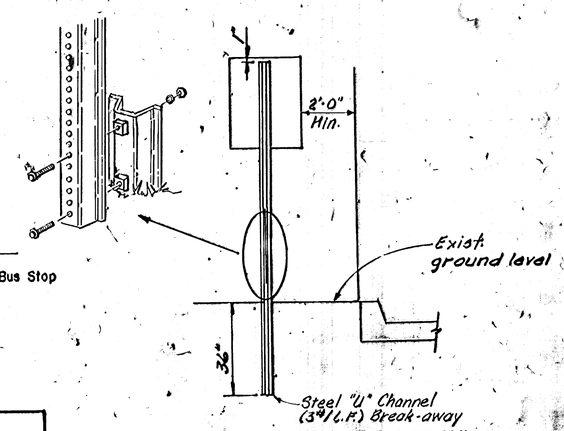

TRAFFIC SIGN INSTALLATION DETAIL

FOR SIGNS NOT GREATER THAN 12" WIDE

SIGN POST LENGTH SUMMARY

BREAKAWAY SIGN POST: 1¾"x1¾" x Varies

LENGTH	TOTAL # POSTS
9'6"	2
2¼"x 2¼" x 18"	2
2" x 2" x 36"	2

U-CHANNEL

LENGTH	TOTAL # POSTS
Stubs 3'	12
Posts 7-½'	2
Posts 9'	4
Posts 9-½'	6
Posts 11'	
Straps & Bolts & Bracket	1

RECAPITULATION OF MATERIALS

ITEMS	TOTAL	UNIT
Sign Face, High Intensity HA Reflective Sheeting)		S.F.
Steel "U" Channel Sign Post		L.F.
Breakaway Sign Post, 1¾"x 1¾"x Varies		L.F.
Breakaway Anchorsleeve, 2¼"x 2¼"x 18"		L.F.
Breakaway Sign Post Anchor, 2"x2"x36"		L.F.

SUMMARY OF QUANTITIES

BID ITEMS	TOTAL	UNIT
Signing	Lump Sum	L.S.

SIGN DESCRIPTION

CLASSIFICATION	TYPE	PROCESS	SIZE	AREA
R1-1	STOP SIGN	REVERSE SCREEN	30" x 30"	5.18 SQ. FT.
R3-7R	RT. LANE MUST TURN RT.	DIRECT SCREEN	30" x 30"	6.25 SQ. FT.
R8-3a	NO PARKING	DIRECT SCREEN	12" x 12"	1.00 SQ. FT.
R2-1	SPEED LIMIT)	DIRECT SCREEN	24" x 30"	5.00 SQ. FT.
①	SNOW EMERGENCY ROUTE	DIRECT SCREEN	12" x 18"	1.50 SQ. FT.
②	NO PARKING/BUS STOP	DIRECT SCREEN	12" x 24"	2.00 SQ. FT.
S-1	NO LT. TURN	DIRECT SCREEN	24" x 36"	6.00 SQ. FT.
③	Expressway Supplemental Guide Sign			
④	Expressway Boundary & Orientation Sign			
⑤	R3-8 Double R			

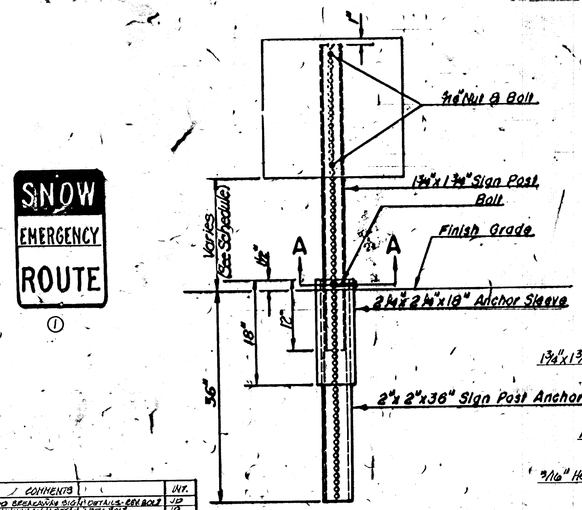

PAVEMENT INSTALLATION SEQUENCE

1. SIGN POST ANCHOR DRIVEN INTO SUBGRADE PRIOR TO THE PLACEMENT OF THE PAVEMENT.
2. ANCHOR SLEEVE DRIVEN INTO SUBGRADE OVER THE SIGN POST ANCHOR PRIOR TO THE PLACEMENT OF THE PAVEMENT.
3. INSERT SIGN POST INTO THE SIGN POST ANCHOR AND BOLT IN PLACE.

GROUND INSTALLATION SEQUENCE

1. SIGN POST ANCHOR DRIVEN INTO THE GROUND.
2. ANCHOR SLEEVE DRIVEN INTO THE GROUND OVER THE SIGN POST ANCHOR.
3. INSERT SIGN POST INTO THE SIGN POST ANCHOR AND BOLT IN PLACE.

NOTE: IN ALL INSTALLATIONS THE FIRST HOLE ABOVE THE FINISHED GRADE LEVEL IN ALL THREE UNITS MUST BE IN LINE FOR INSERTION OF THE BOLT.

ALL BOLTS AND NUTS FOR FASTENING THE SIGNS AND SIGN POST ASSEMBLY SHALL COMPLY WITH SECTION 1614 AND ALL WASHERS SHALL COMPLY WITH SECTION 1614 OF THE STANDARD SPECIFICATION FOR STATE ROAD AND BRIDGE CONSTRUCTION (1980 EDITION) AND SHALL BE SUBSIDIARY ITEM.

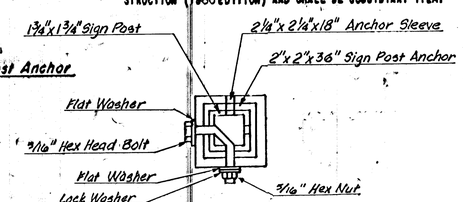

SECTION A-A

BREAK-AWAY SIGN POST DETAIL

NOTE: ALL LETTER, NUMBER & SYMBOL SIZES, SPACING & COLORS AND THE SIGN COLORS SHALL CONFORM TO THE CURRENT "MANUAL ON UNIFORM TRAFFIC CONTROL DEVICES."

ALL SIGN MATERIAL TO BE 0.080" ALUMINUM.

REV DATE	/ CONTENTS	INT.
JUN 89	SIGN & POST BREAKAWAY DETAILS-SEE BOLT	JLD
FEB 90	SEE SIGNING DETAILS FOR SIGN SIZE	JLD
JAN 93	ADD SNOW EMERGENCY ROUTE ON BOTH	JLD
DEC 93	ADD BREAKAWAY DETAILS	JLD

WICHITA, KANSAS

SIGNING DETAILS

JOB NO.: DATE: CH'KD:
SCALE: None DRAWN: APPV'D: SHL OF