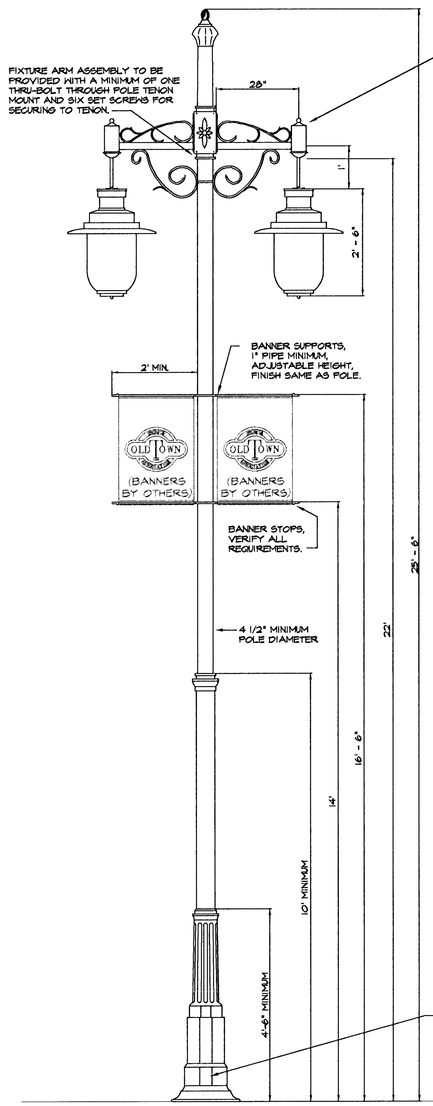

LIGHT FIXTURE "A" DETAIL

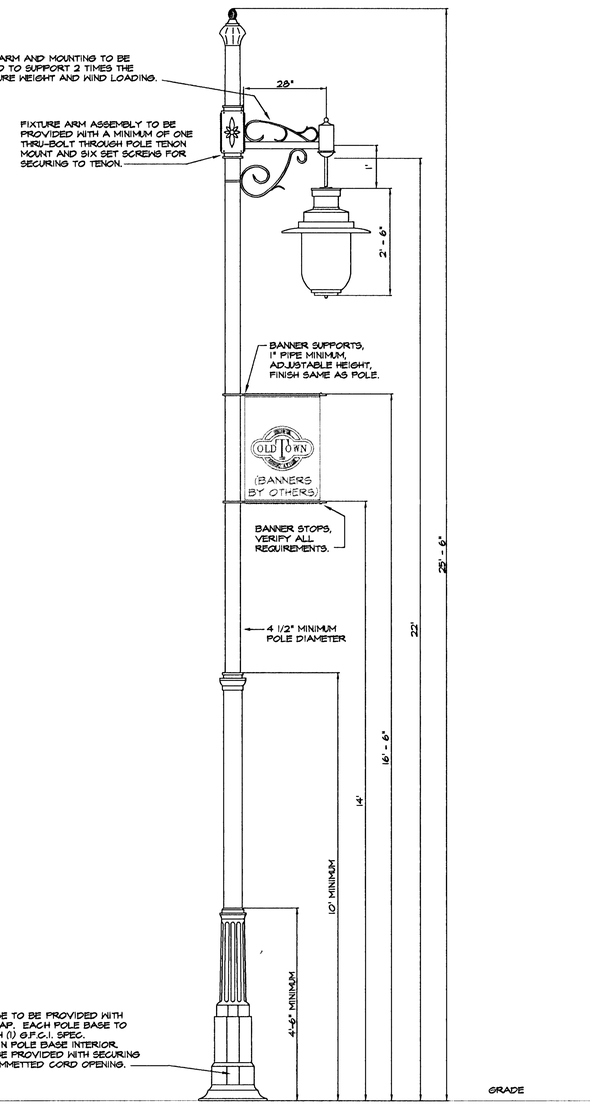

LIGHT FIXTURE "C" DETAIL

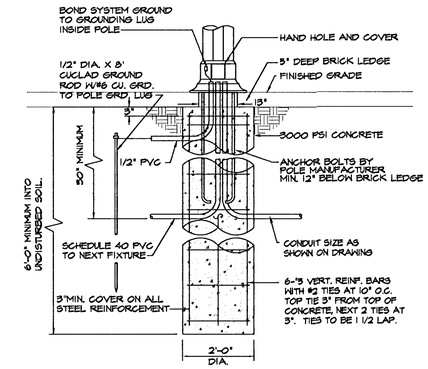

POLE BASE DETAIL
WITH BRICK LEDGE

N.T.S.

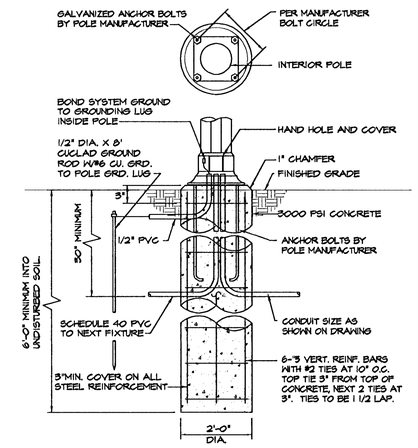

POLE BASE DETAIL

N.T.S.

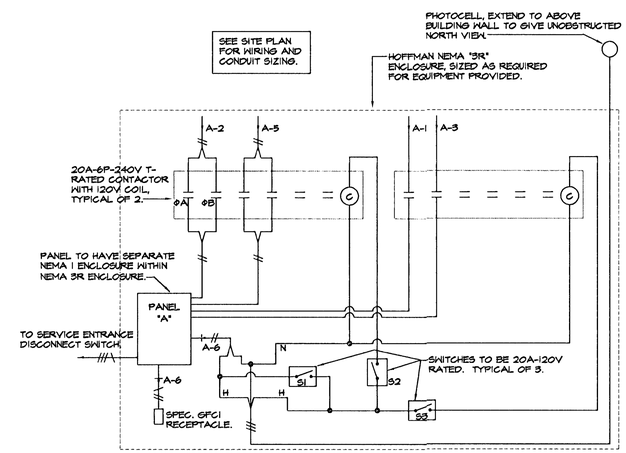

ALL WIRING TO BE #12 MINIMUM, ALL CONDUIT TO BE 3/4" MINIMUM UNLESS NOTED OTHERWISE.

CONTROL CABINET "A" WIRING DETAIL

NO SCALE

(CONTROL CABINET "B" IS TYPICAL)

TYPICAL SWITCH "S1", "S2" & "S3" OPERATION.
SWITCH S1 BYPASSES PHOTOCELL.
SWITCH S2 ACTIVATES/DEACTIVATES POLE LIGHTING.
SWITCH S3 ACTIVATES/DEACTIVATES RECEPTACLES.

PHILIP JOHN VOGEEN
11701
2-18-94
KANSAS
PROFESSIONAL ENGINEER

Stefan, Vogeli & Associates Inc.
Electrical Engineering and Design
626 N. Broadway, Suite B
Wichita, Ks. 67214-3597
(316) 264-3061
FAX: (316) 264-3542

OLD TOWN PARKING LOTS
LOTS #9 AND #10

SRB 841 SOUTH HILLSIDE WICHITA, KANSAS 67211 316-652-7754 FAX 652-7932
SAVOY, RUGGLES & BOHM, P.A.
ENGINEERING & SURVEYING

REVISED

PROJECT NUMBER

DRAWN	DESIGN	REVIEW	DATE	UTILITY	SRB JOB
SVA	SVA	SVA	2/18/94		113E

DWG. FILE 402ZC02

8
14

S.V.A. DWG. NAME: D:\SAVOZ\WO\ZC02; DATE: 02/18/94; TIME: 07:01