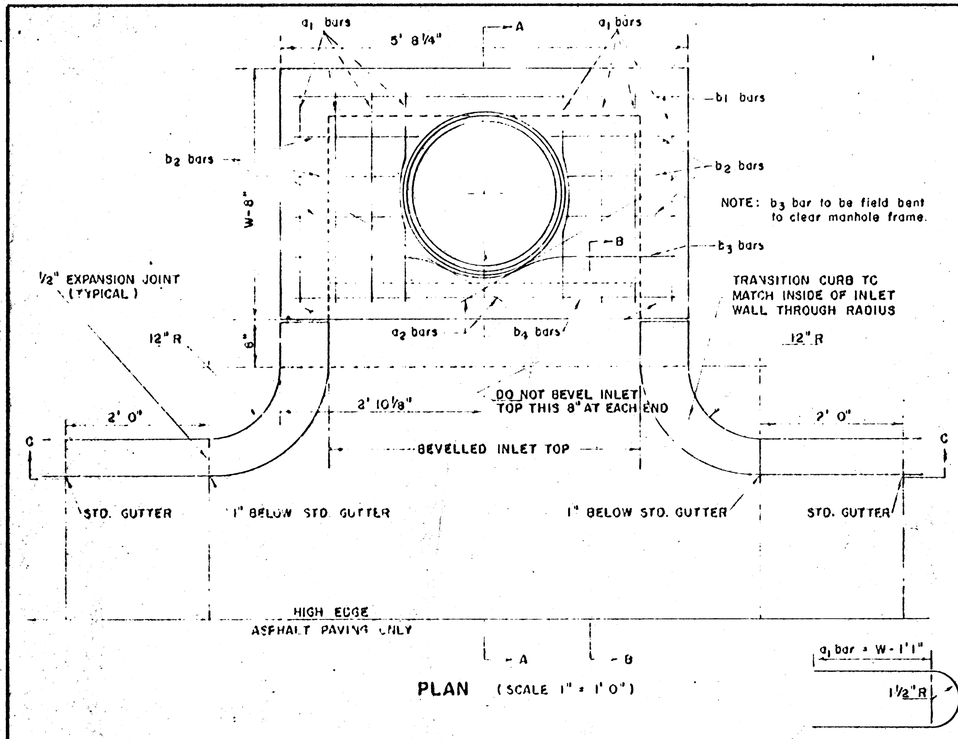

PLAN (SCALE 1" = 1' 0")

BENDING DIAGRAM

STEEL SCHEDULE

BAR		a_1	a_2*	b_1 W=4'2"	b_1 W=5'0"	b_1 W=6'0"	b_1 W=7'0"	b_1 W=8'0"	b_2	b_3	b_4	WT. LBS.
NUMBER		8	2	1	3	5	7	9	6	1	1	
SIZE		#4	#4	#4	#4	#4	#4	#4	#4	#4	#6	
LENGTH	W=4'2"	6' 5"	3' 4"	5' 5"	–	–	–	–	1' 5"	5' 6"	5' 5"	60#
	W=5'0"	8' 1"	4' 4"	–	5' 5"	–	–	–	1' 5"	5' 6"	5' 5"	77#
	W=6'0"	10' 1"	5' 4"	–	–	5' 5"	–	–	1' 5"	5' 6"	5' 5"	97#
	W=7'0"	11' 1"	6' 4"	–	–	–	5' 5"	–	1' 5"	5' 6"	5' 5"	111#
	W=8'0"	12' 1"	7' 4"	–	–	–	–	5' 5"	1' 5"	5' 6"	5' 5"	124#

* NOTE: a_2 BARS TO BE PLACED APPROX. 2" BELOW TOP OF INLET COVER

STANDARD CURB INLET PRECAST TOPS			
W	PRE-CAST TOP SIZE	PIPE SIZE	CU. YD. CONC.
4' 2"	3'8"x5'8 1/4"x7 1/2"	21" & SMALLER	0.46 *
5' 0"	4'4"x5'8 1/4"x7 1/2"	24" & 30"	0.57 *
6' 0"	5'4"x5'8 1/4"x7 1/2"	36" & 42"	0.71 *
7' 0"	6'4"x5'8 1/4"x7 1/2"	48" & 54"	0.84 *
8' 0"	7'4"x5'8 1/4"x7 1/2"	60" & 66"	0.97 *

* GROSS VOLUME

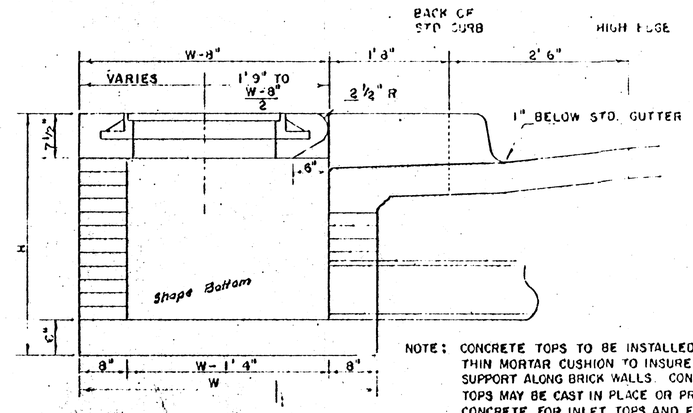

SECTION A-A
(SCALE 1" = 1' 0")

NOTE: CONCRETE TOPS TO BE INSTALLED ON THIN MORTAR CUSHION TO INSURE FULL SUPPORT ALONG BRICK WALLS. CONCRETE TOPS MAY BE CAST IN PLACE OR PRECAST CONCRETE FOR INLET TOPS AND FLOORS SHALL BE STANDARD PAVING MIX.

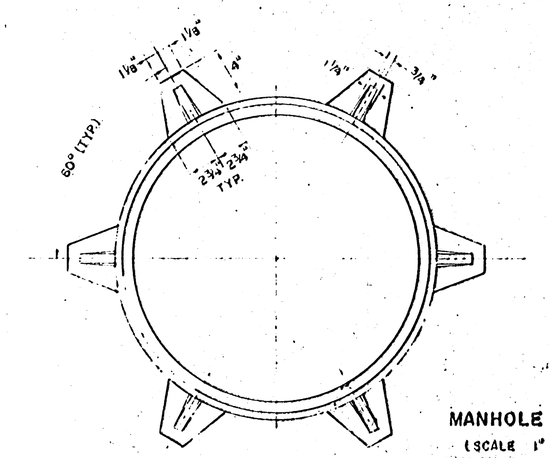

MANHOLE FRAME
(SCALE 1" = 6")
WEIGHT = 180 LBS.

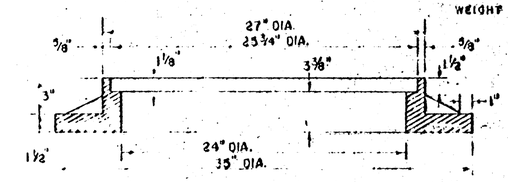

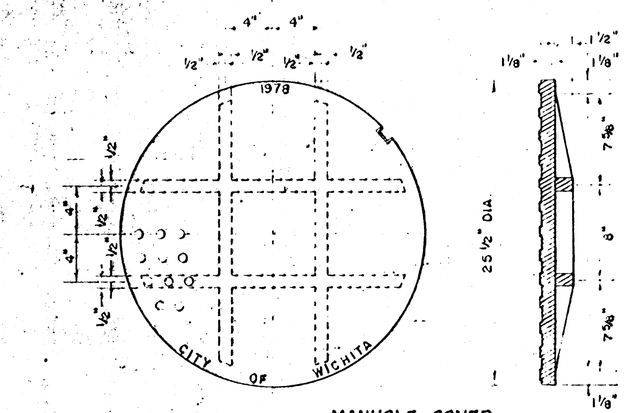

MANHOLE COVER
(SCALE 1" = 6")
WEIGHT = 170 LBS.

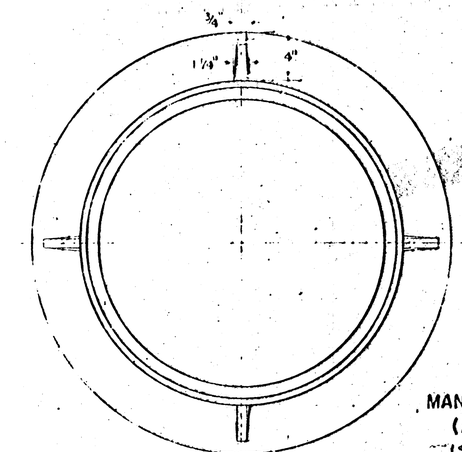

MANHOLE FRAME (ALTERNATE)
(SCALE 1" = 6")
WEIGHT = 180 LBS.

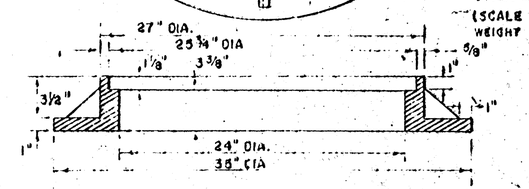

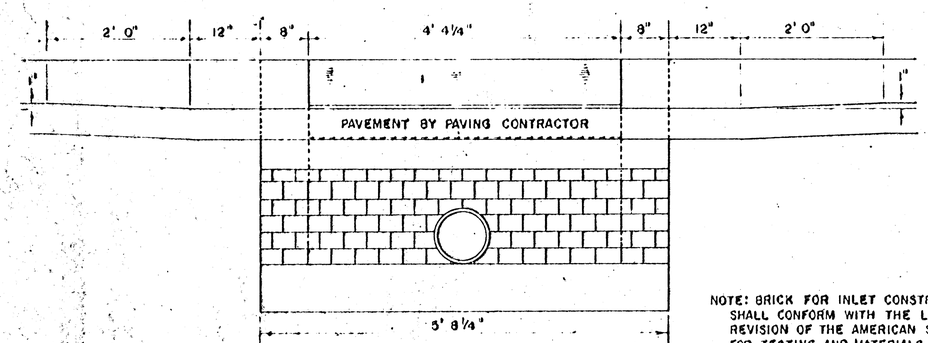

SECTION C-C
(SCALE 1" = 1' 0")

NOTE: BRICK FOR INLET CONSTRUCTION SHALL CONFORM WITH THE LATEST REVISION OF THE AMERICAN SOCIETY FOR TESTING AND MATERIALS DESIGNATION C-32 FOR MANHOLE BRICK GRADE MS.

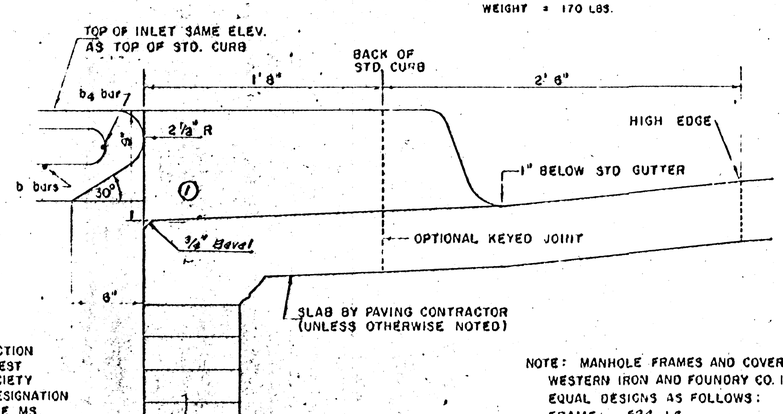

SECTION B-B
(SCALE 1" = 6")

NOTE: MANHOLE FRAMES AND COVER ARE WESTERN IRON AND FOUNDRY CO. INC. OR EQUAL DESIGNS AS FOLLOWS:
FRAME: 524-L6
FRAME (ALTERNATE): 500 A4
COVER: 222 S4 "NOBBY"

1 Rev 5-13-81

DETAIL STANDARD TYPE IA CURB INLET

CITY OF WICHITA, KANSAS

R.W. BRUGGEMAN, DIRECTOR OF ENGINEERING/ CITY ENGINEER

JUNE, 1981