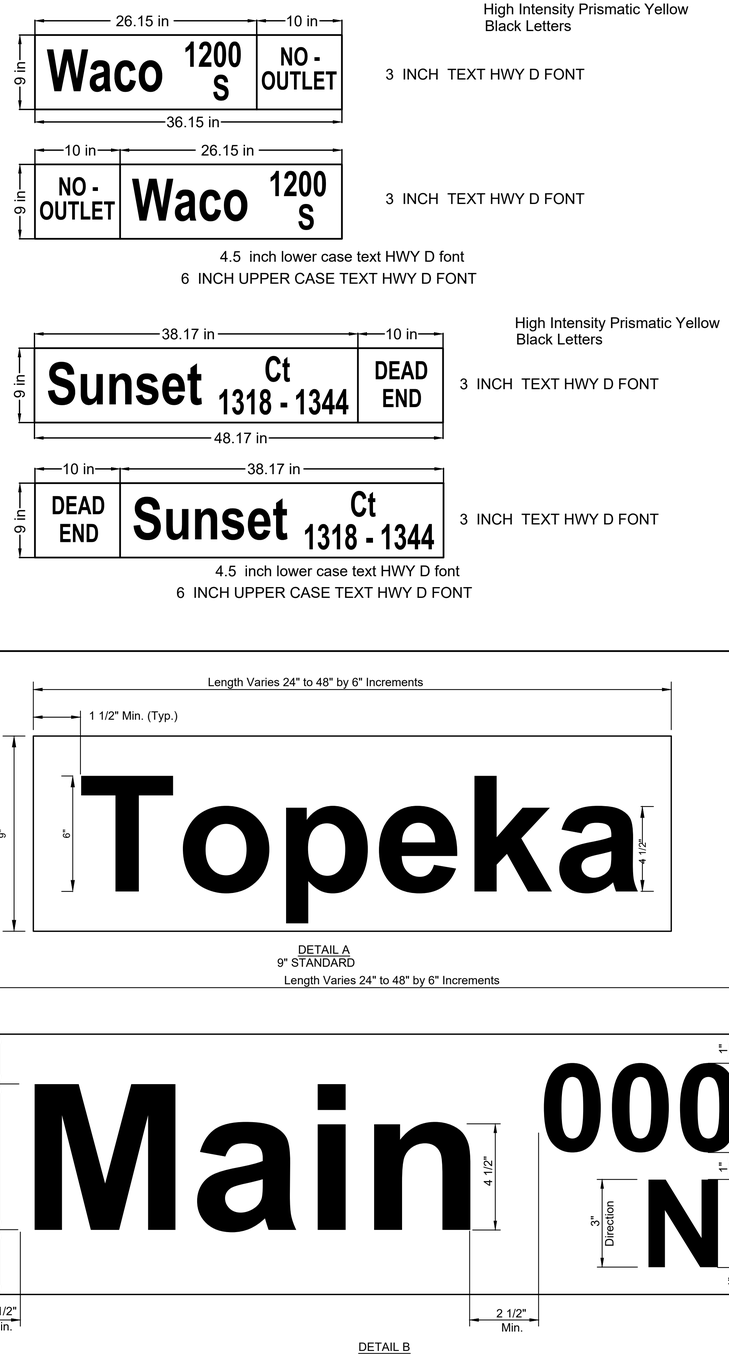


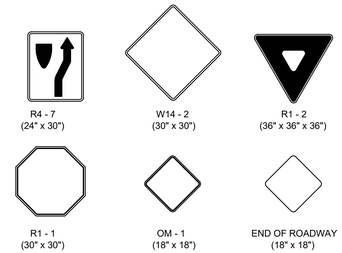


* IN NO CASE SHALL THE SPECIFICATIONS BE LESS THAN REQUIRED BY THE CURRENT MUTCD.

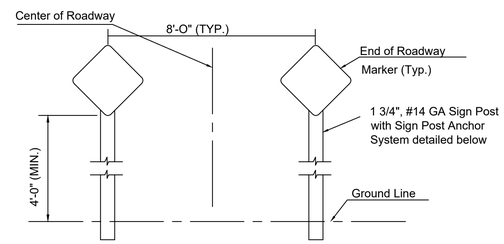


TYPICAL END OF ROADWAY SIGN MOUNTING INSTALLATION

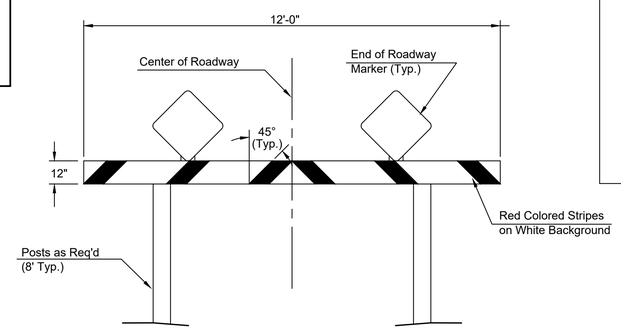


TYPE I BARRICADE DETAIL W/ E.O.R. MARKERS

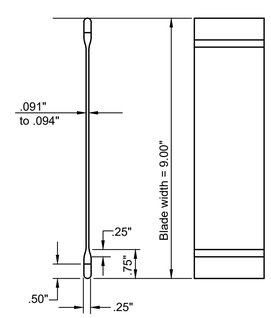


STREET NAME SIGN
BLADE DETAILS

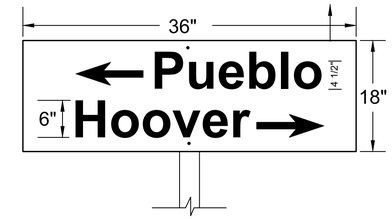


FLAT PLATE STREET NAME SIGN

## PERFORATED TUBE SIGN POST INSTALLATION

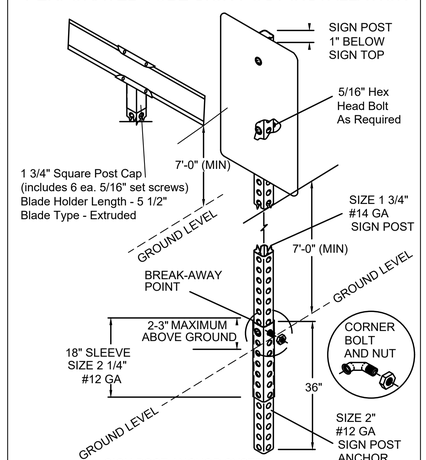


SIGN POST ANCHOR SYSTEM

## SIGN ASSEMBLY TABLE

| STATION | OFFSET | SIGN | QUANTITY* |
|---|---|---|---|
| MONTEREY | | | |
| 43+39.47 | 19.5 RT | SNS | 1 |
| 38+59.47 | 19.5 RT | SNS | 1 |
| LYNNDALE | | | |
| 29+22.32 | 28.0 RT | SNS | 1 |
| 34+26.44 | 25.0 LT | SNS | 1 |
| 34+30.98 | 31.0 RT | SNS | 1 |
| | | | |
| | | | |
| | | |