FHWA REGION NO.	STATE	PROJECT NO.	YEAR	SHEET NO.	TOTAL SHEETS
7	KANSAS	87 N-0061-01	1998	16	91

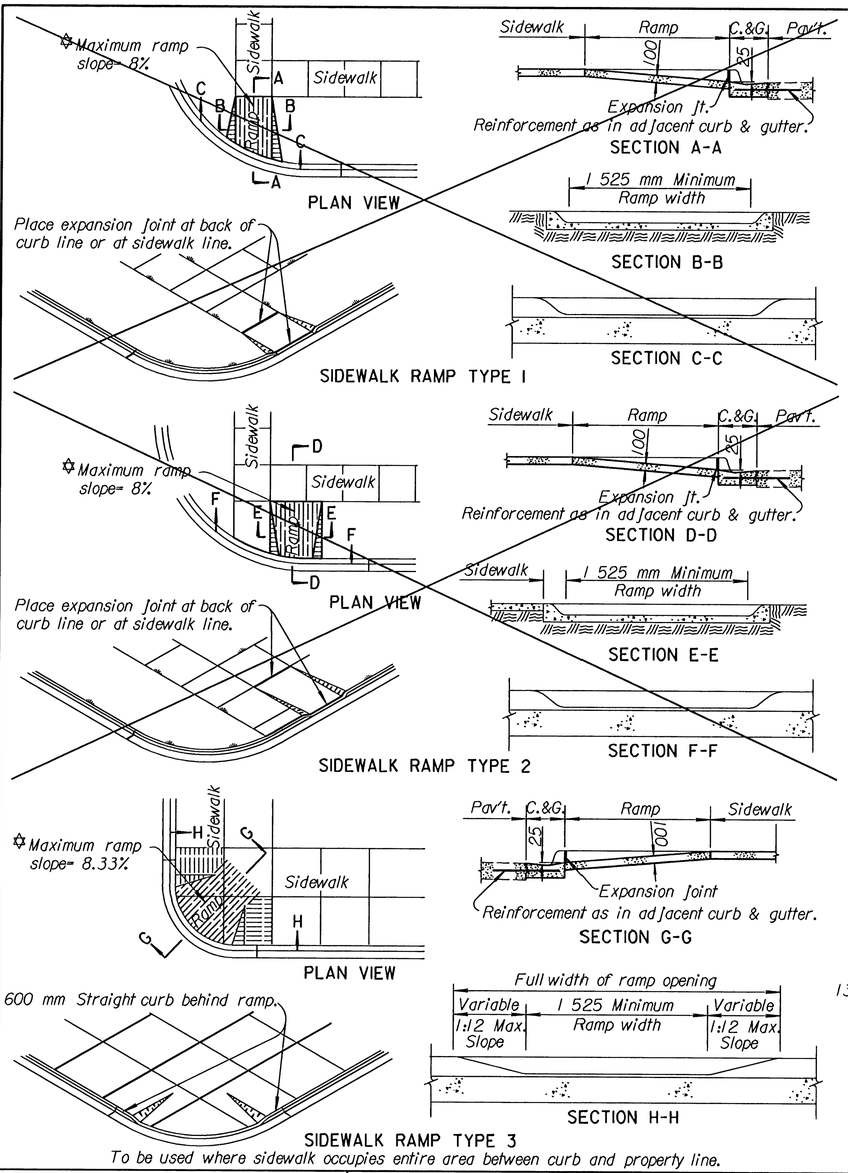

Maximum ramp slope in new construction shall be 8.33%.
Desirable maximum ramp slope on existing sites shall be 8.33%.

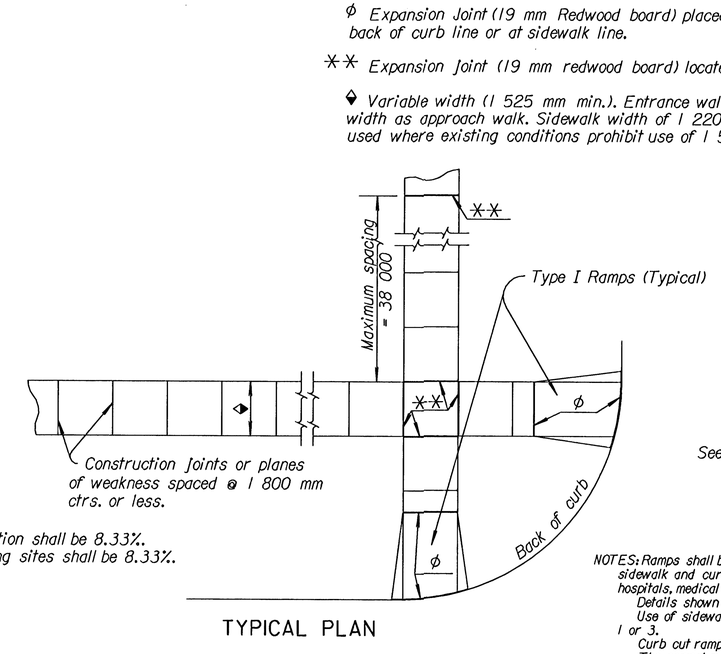

TYPICAL PLAN

Ø Expansion Joint (19 mm Redwood board) placed at either back of curb line or at sidewalk line.

✱✱ Expansion Joint (19 mm redwood board) located as shown.

◆ Variable width (1 525 mm min.). Entrance walk to be same width as approach walk. Sidewalk width of 1 220 mm may be used where existing conditions prohibit use of 1 525 mm

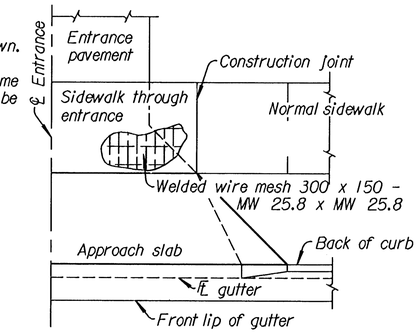

REINFORCEMENT DIAGRAM
SIDEWALK THROUGH ENTRANCE

See Standard No. RD683 SI for details of Alley and Entrance Pavement.

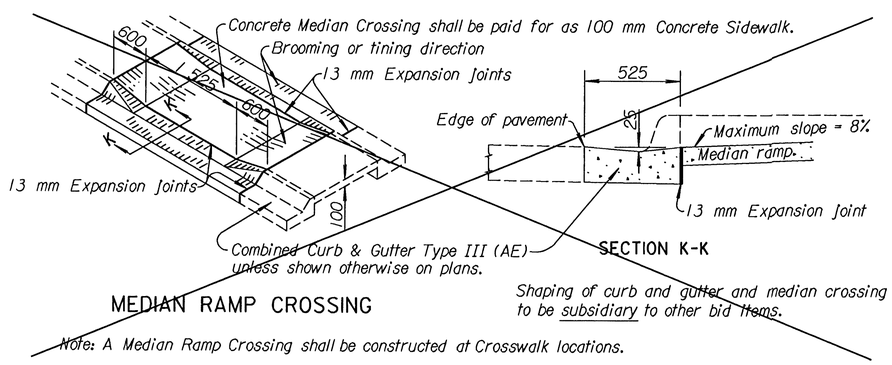

MEDIAN RAMP CROSSING

Shaping of curb and gutter and median crossing to be subsidiary to other bid items.

Note: A Median Ramp Crossing shall be constructed at Crosswalk locations.

NOTES: Ramps shall be provided at all corners of street intersections where there is existing or proposed sidewalk and curb. Ramps shall also be provided at walk locations in mid-block in the vicinities of hospitals, medical centers and athletic stadiums.

Details shown on this sheet apply to all construction or reconstruction of streets, curbs or sidewalks.

Use of sidewalk ramp Type 2 shall be restricted to locations where is is not feasible to use Types 1 or 3.

Curb cut ramps are to be located as shown on the plans or as directed by the Engineer.

The normal gutter line profile shall be maintained through the area of the ramp.

If possible, drainage structures should not be placed in line with ramps. Except where existing drainage structures are being utilized in the new construction, location of the ramp should take precedence over location of drainage structure.

Sidewalks shall be ramped where the driveway curb is extended across the walk.

Care shall be taken to assure a uniform grade on the ramp, free of sags and short grade changes.

Expansion joints shall be placed in sidewalks as follows: In long runs, expansion joints shall be 19 mm redwood boards flush with the surface, at a maximum spacing of 38 m. This same joint should be used at sidewalk junctions as shown in Typical Plan.

Where the end of the sidewalk abuts a curb, a 19 mm redwood board flush with the surface shall be used.

Where the sidewalk is parallel and adjacent to a rigid structure, a 13 mm premoulded joint filler (Nonextruding, Type B) shall be used.

Sidewalk shall slope toward the street at a maximum of 2%, and where necessary, may be depressed or sloped to fit alleys and entrances as shown on the plans or as directed by the Engineer.

Where clear width of sidewalk between top of ramp and building or other obstruction is less than 1 220 mm, the slope of the flared sides shall not exceed 8%.

Where sidewalk is shown to be constructed back of an entrance it shall be 150 mm thick with welded wire mesh reinforcement of the same gauge and spacing of wires as in extrance pavement, as shown in the Reinforcement Diagram. Bid item will be "Sidewalk Construction (150 mm) either with or without air entrainment.

Where the plans do not require air entrainment for sidewalk and sidewalk ramps, at the Contractor's option, Class A Concrete (AE) may be used throughout. Payment will be made as square meters of Sidewalk Construction.

~~At the Contractor's option Class A Concrete (AE) may be used throughout for construction of steps but payment will be made as Class A Concrete.~~

Surface texture of the ramp shall be that obtained by a coarse brooming or steel tining transverse to the slope of the ramp and shall be sufficient to provide a ramp surface which contrasts with adjacent surfaces.

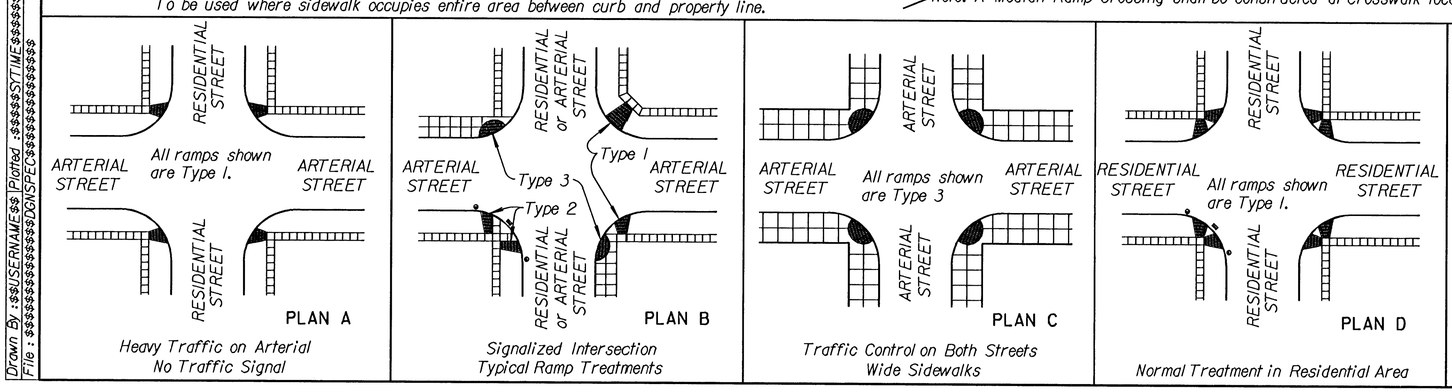

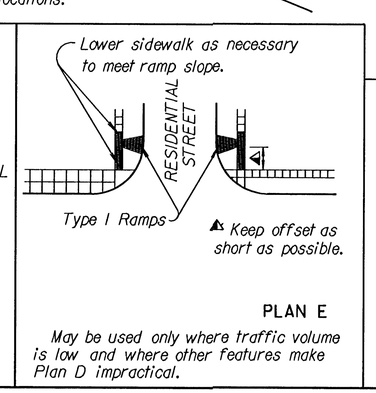

LEGEND

- Sidewalk Ramp Type 1
- Sidewalk Ramp Type 2
- Sidewalk Ramp Type 3
- Preferred location of drainage inlet (Typical)
- Alternate location of drainage inlet (Typical)
- Sidewalk

NO.	DATE	REVISIONS	BY	APP'D
3				
2				
1				

KANSAS DEPARTMENT OF TRANSPORTATION

SIDEWALK ~~& STEPS~~

~~RD690 SI~~

FHWA APPROVAL	10-26-94	APP'D. James O. Brewer	
DESIGNED	DETAILED	QUANTITIES	TRACED Bowser
DESIGN CK.	DETAIL CK.	QUAN.CK.	TRACE CK. Seltz

Drawn By: $$USERNAME$$ | Plotted: $$$$$$$$TIME$$$$$$$$
File: $$$$$$$$$