FHWA REGION NO.	STATE	PROJECT NO.	YEAR	SHEET NO.	TOTAL SHEETS
7	KANSAS	87N-0061-01	1998	48	91

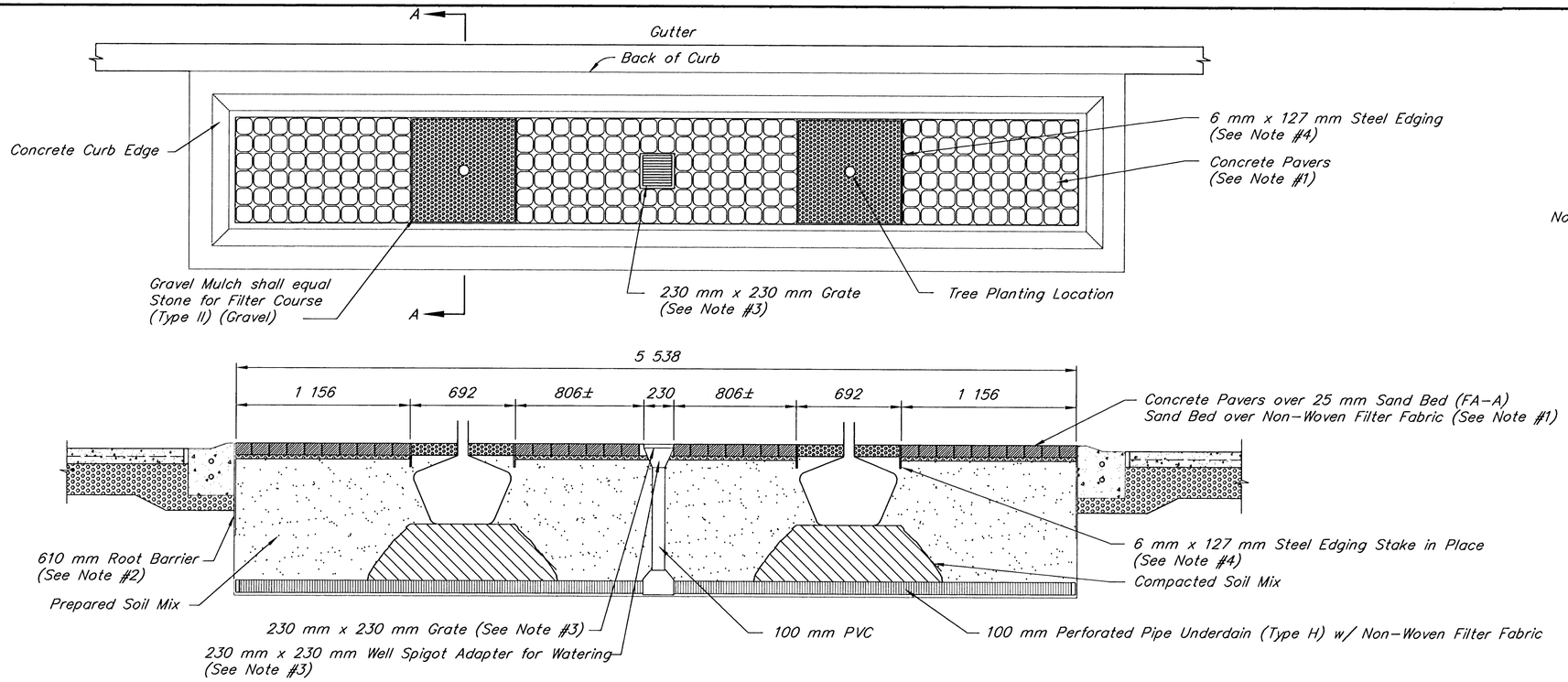

BROADWAY STREET TREE PLANTER (DOUBLE)

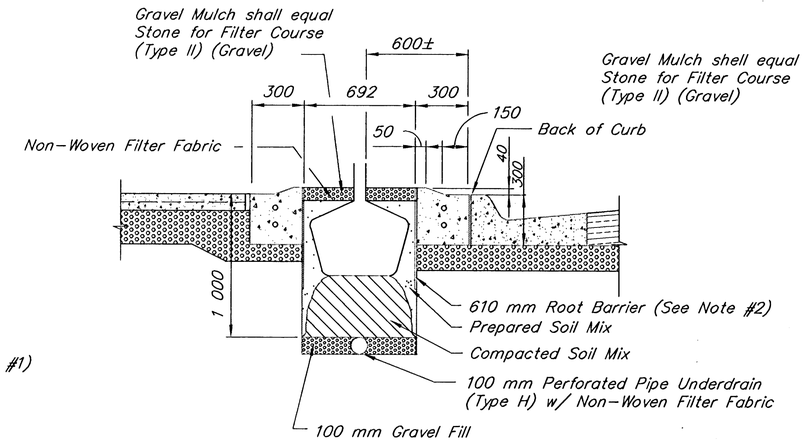

SECTION A-A

SUMMARY OF QUANTITIES (For Information Only - To be included in Landscaping & Seeding)		
ITEM	UNIT	QUANTITY
Broadway Street Tree Planter (Single)	Each	16
Broadway Street Tree Planter (Double)	Each	11

NOTES:

1. Concrete pavers shall be equal to "UNI Eco-Stone" paver.
2. Root barrier shall be installed per manufacturer's recommendations in specified locations. Root barrier shall be equal to "61 cm Universal Barrier" by Deep Root Partners, L.P. 345 Lorton Avenue, Suite 103, Burlingame, CA 94010
3. Well Spigot Adapter and Grate shall be installed per manufacturer's recommendations in specified locations. Well Spigot Adapter shall be equal to "NDS #931, 230mm x 230mm Square Deep Well Spigot Adapter" and Grate shall be equal to "NDS #980 230mm square structural Foam Polyethylene Grate with UV Inhabitor" by NDS, P.O. Box 339 Lindsay, CA 93247
4. Steel Edging shall be installed per manufacturer's recommendations in specified locations. Steel Edging shall be equal to "6mm x 127mm Roadway Edging with stakes" by Ryerson P.O. Box 411588, Kansas City, MO 64141

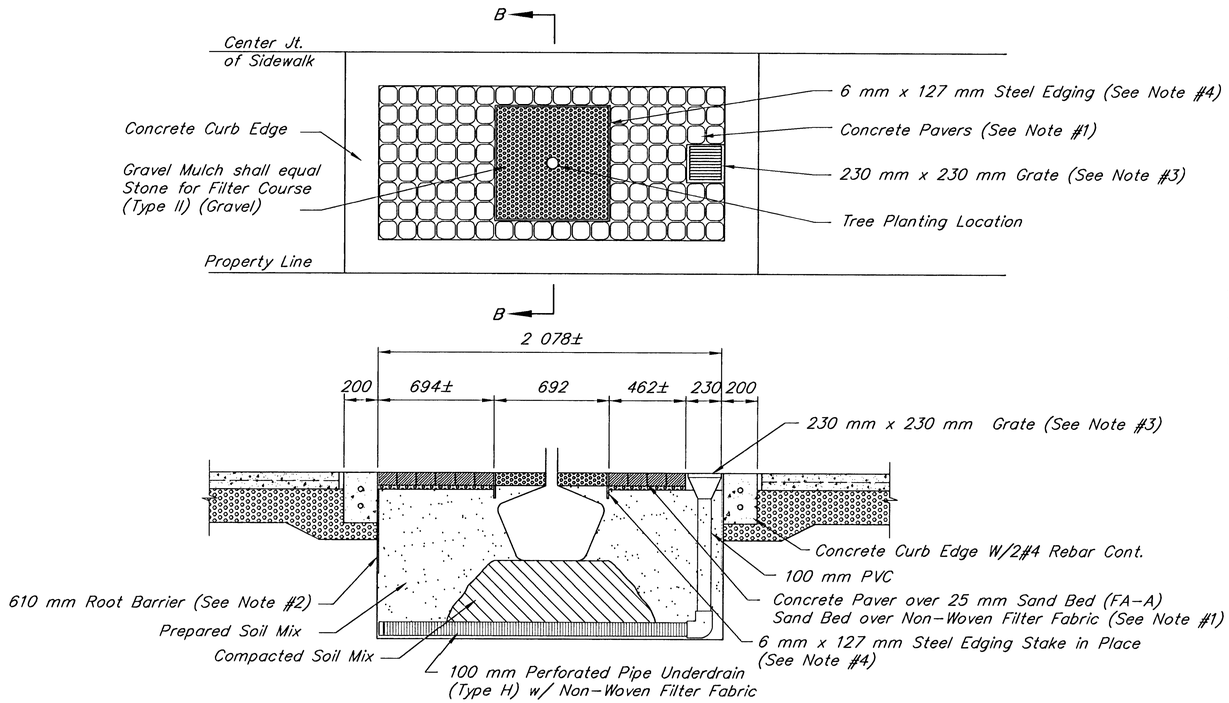

BROADWAY STREET TREE PLANTER (SINGLE)

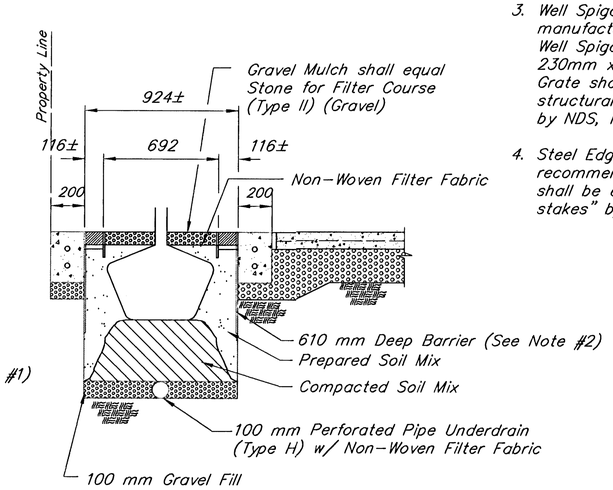

SECTION B-B

CITY OF WICHITA

BROADWAY

LANDSCAPE
TREE PLANTER DETAILS

Booker ASSOCIATES INC. OF KANSAS
Wichita Kansas

SCALE	DATE	DWG. NO. K9542

Sheet 48

SURV. | PLOT CADD | DES. KEM | DR. VLW | TR. | CKD. KEM | APP.

Last Plot-Date: 05/28/98 Plot-Time: 1:30 P.M.

C:\K9542\TREEDET
SCALE 1:200