PLOTTED: Thursday, January 07, 2021 @ 04:01PM

PRIVATE WATER DISTRIBUTION SYSTEM IMPROVEMENTS

TO SERVE

TRINITY ACADEMY THIRD ADDITION

12345 E 21ST STREET N
WICHITA, KS 67206

THE CITY OF WICHITA, KANSAS
GARY JANZEN, P.E. - CITY ENGINEER

PROJECT NO.
PPW-2020-005236 (183021)

AS-BUILT PLANS - JANUARY 2021

INSPECTED BY:	LARRY SCHALLER, MKEC ENGINEERING INC
CONSTRUCTED BY:	McCULLOUGH EXCAVATION
SUPERINTENDENT:	ROB GRAY

8" PIPE:	305.8	LF
4" PIPE:	53.6	LF
FIRE HYDRANT:	1	EA
8" VALVE ASSY.:	1	EA
6" VALVE ASSY.:	1	EA
6" DIMJ 90° BENDS:	1	EA
4" DIMJ 11.25° BENDS:	1	EA
8"x8" DIMJ TEE:	1	EA
8" BLOWOFF ASSY:	1	EA

GENERAL NOTES

1. THE CONTRACTOR SHALL COMPLY WITH ALL APPLICABLE SAFETY REGULATIONS. ALL CONSTRUCTION SHALL BE COMPLETED FOLLOWING CURRENT CITY STANDARD SPECIFICATIONS AND SPECIAL PROVISIONS.

2. CONTRACTOR WILL BE REQUIRED TO PROVIDE NOTICE TO UTILITY COMPANIES A MINIMUM OF SEVENTY-TWO (72) HOURS PRIOR TO ANY EXCAVATION, AS FOLLOWS:

   KANSAS ONE-CALL 687-2470

   THE CONTRACTOR MUST NOTIFY THE FOLLOWING IN CASE OF AN EMERGENCY:

AT&T	1-800-246-8464
BLACK HILLS ENERGY (GAS)	1-800-694-8989
CITY OF WICHITA WATER & SEWER	1-316-219-8921
CITY OF WICHITA STORMWATER	1-316-268-4090
CITY OF WICHITA TRAFFIC	1-316-268-4034
COX COMMUNICATIONS	1-888-249-3530
KANSAS GAS SERVICE	1-888-482-4950
WESTAR ENERGY	1-800-544-4857

3. UTILITY SERVICE LINES, POLES, ETC. ARE TO BE ADJUSTED AS NECESSARY BY OTHERS PRIOR TO CONSTRUCTION UNLESS THE PLANS SPECIFICALLY CALL FOR THEIR ADJUSTMENT BY THE CONTRACTOR OR UNLESS THE PLANS SPECIFICALLY IDENTIFY A UTILITY TO BE ADJUSTED BY ITS OWNER DURING CONSTRUCTION. EXISTING UTILITIES AND THEIR LOCATION, AS SHOWN ON THE PLANS, REPRESENT THE BEST INFORMATION OBTAINABLE FOR DESIGN. THE CONTRACTOR WILL BE REQUIRED TO WORK AROUND EXISTING UTILITIES WITHIN THE RIGHT-OF-WAY WHICH DO NOT CONFLICT WITH PROPOSED CONSTRUCTION.

4. RUBBLE FROM THE REMOVAL OF MISCELLANEOUS STRUCTURES AND EXCESS EXCAVATION WHICH IS TO BE WASTED SHALL BE DISPOSED OF ON SITES TO BE PROVIDED BY THE CONTRACTOR. THESE SITES SHALL BE APPROVED BY THE ENGINEER AS TO SUITABILITY, APPEARANCE AND SITE LOCATION. LOCATIONS, IN THE OPINION OF THE ENGINEER, THAT WILL LEAVE AN UNSIGHTLY APPEARANCE WILL NOT BE APPROVED. ALL DISPOSAL SITES MUST BE APPROVED BY THE KANSAS DEPARTMENT OF HEALTH AND ENVIRONMENT. MATERIAL EITHER STOCKPILED OR DISPOSED OF IN A FLOOD PLAIN WILL REQUIRE A KANSAS STATE BOARD OF AGRICULTURE PERMIT. ANY MATERIAL DUMPED IN WATERS OF THE UNITED STATES OR WETLANDS IS SUBJECT TO U.S. CORPS OF ENGINEERS PERMITTING REGULATIONS. ANY MATERIAL BURIED OR STOCKPILED BEYOND APPROVED CONSTRUCTION LIMITS WILL REQUIRE ADDITIONAL ARCHAEOLOGICAL INVESTIGATIONS UNLESS BURIED IN A PREVIOUSLY APPROVED BORROW LOCATION.

5. TREES AND SHRUBS IN PUBLIC RIGHT-OF-WAY WHICH ARE IN DIRECT CONFLICT WITH PROPOSED NEW CONSTRUCTION SHALL BE REMOVED BY THE CONTRACTOR WITH THE CITY ENGINEER'S APPROVAL. TREES AND SHRUBS WHICH ARE NOT IN DIRECT CONFLICT WITH PROPOSED NEW CONSTRUCTION SHALL BE SAVED AND PROTECTED FROM DAMAGE.

6. THE CONTRACTOR SHALL GIVE ALL PROPERTY OWNERS AND/OR TENANTS OF DEVELOPED PROPERTY ABUTTING THE CONSTRUCTION OF THIS PROJECT A MINIMUM OF TEN (10) DAYS NOTICE PRIOR TO START OF CONSTRUCTION.

7. THE CONTRACTOR SHALL BE RESPONSIBLE FOR PRESERVING PROPERTY IRONS. THE CONTRACTOR WILL BE REQUIRED TO RE-ESTABLISH ANY PROPERTY IRONS WHICH ARE DAMAGED OR DESTROYED BY HIS CONSTRUCTION OPERATIONS. SUCH IRONS SHALL BE RE-ESTABLISHED BY A LICENSED LAND SURVEYOR IN ACCORDANCE WITH STATE LAWS.

8. THE ENGINEERING DIVISION SHALL FIELD LOCATE WATER VALVES ONE TIME DURING CONSTRUCTION WHEN REQUESTED BY THE CONTRACTOR. IT SHALL BE THE CONTRACTOR'S RESPONSIBILITY TO PRESERVE SUCH FIELD LOCATIONS DURING THE CONSTRUCTION PROCESS. WATER VALVES, VALVE BOXES OR FIRE HYDRANTS DAMAGED DURING CONSTRUCTION SHALL BE REPAIRED BY CONTRACTOR AT HIS OWN EXPENSE. VALVE BOXES AND WATER METERS WITHIN THE PROJECT LIMITS SHALL BE ADJUSTED TO MATCH FIELD GRADES BY THE CONTRACTOR.

9. THE CONTRACTOR SHALL NOTIFY THE INSPECTING ENGINEER AND TOM MASON AT 316-268-4574 WITH THE CITY OF WICHITA WITH THE ANTICIPATED CONSTRUCTION START DATE AND NOTIFY THEM OF PROJECT COMPLETION. STAKING AND INSPECTION FOR THIS PROJECT WILL BE THE RESPONSIBILITY OF THE CONTRACTOR.

10. IF TRAFFIC WILL BE IMPACTED BY CONSTRUCTION, A TRAFFIC CONTROL PLAN MUST BE SUBMITTED AND APPROVED BY THE CITY TRAFFIC ENGINEER, MIKE ARMOUR AT traffic@wichita.gov BEFORE CONSTRUCTION CAN BEGIN. THE CONTRACTOR SHALL BE RESPONSIBLE FOR ALL TRAFFIC CONTROL MEASURES TO FACILITATE CONSTRUCTION. ALL CONSTRUCTION ZONE MARKINGS AND SIGNAGE SHALL CONFORM TO THE LATEST VERSION OF THE MANUAL ON UNIFORM TRAFFIC CONTROL DEVICES (MUTCD) AS PUBLISHED BY THE US DEPT. OF TRANSPORTATION, FEDERAL HIGHWAY ADMINISTRATION. ALL COSTS ASSOCIATED WITH CONSTRUCTION MARKINGS AND SIGNAGE SHALL BE THE CONTRACTOR'S RESPONSIBILITY.

11. ALL ELEVATIONS SHOWN ARE NAVD 88.

12. ALL AREAS DISTURBED DURING CONSTRUCTION THAT WILL NOT BE UNDER PROPOSED PAVEMENT SHALL BE RESTORED TO MATCH EXISTING CONDITIONS.

13. ANY SIDEWALK, DRIVE APPROACH, CURB, OR STREET PAVEMENT REMOVED TO CONSTRUCT PROJECT MUST HAVE A PAVEMENT CUT PERMIT AND BE REPLACED BY CITY CONTRACTOR. PERMITS CAN BE OBTAINED BY CALLING 316-268-4501 OR 316-268-4480.

14. ALL APPLICABLE FEES (TAP, EQUITY, IN LIEU OF & MAIN BENEFIT) MUST BE PAID BEFORE ANY CONNECTIONS CAN BE MADE ON THIS PROJECT. QUOTES CAN BE OBTAINED ON FEES BY CALLING 316-268-4555.

15. CITY MAINTENANCE OF WATER MAINS ENDS AT RIGHT-OF-WAY OR EASEMENT LINE OR WITHIN TWO FEET OF VAULT.

16. CONTRACTOR SHALL LIMIT THE EXTENT OF TRENCH OPEN OVERNIGHT AND WEEKENDS TO LESS THAN 50 FEET.

17. EXISTING UTILITIES AND THEIR LOCATION, AS SHOWN ON THE PLANS REPRESENT THE BEST INFORMATION OBTAINABLE FOR DESIGN. LOCATION INFORMATION HAS BEEN OBTAINED FROM THE VARIOUS COMPANIES AND IS EITHER FROM COMPANY UTILITY DRAWINGS OR COMPANY PROVIDED FIELD LOCATIONS. THE PLAN LOCATIONS SHOWN ARE NOT GUARANTEED. ADDITIONAL EXISTING UTILITIES MAY ALSO BE ENCOUNTERED.

18. OPENING AND CLOSING OF WATER VALVES SHALL BE DONE SLOWLY TO PREVENT DAMAGE TO THE WATER DISTRIBUTIONS SYSTEM FROM WATER HAMMER. ALL VALVES CLOSED BY THE CONTRACTOR MUST BE REOPENED AS NEW CONSTRUCTION PERMITS. THE PROJECT INSPECTOR MUST ASCERTAIN THAT ANY VALVE CLOSED BY THE CONTRACTOR IS REOPENED. THE CONTRACTOR WILL BE PERMITTED TO OPERATE WATER VALVES ONLY WHEN THE PROJECT INSPECTOR ASSIGNED TO THE PROJECT IS PRESENT.

19. THE CONTRACTOR SHALL LAY A TRACER WIRE AND SET TEST STATIONS ALONG ALL WATER PIPE INSTALLED IN ACCORDANCE WITH CITY SPECIFICATIONS AND TRACER WIRE DETAIL ON DETAIL SHEET WL-101, COST IS SUBSIDIARY TO PIPE INSTALLATION.

20. THE CONTRACTOR SHALL PROVIDE MATERIALS FOR TEMPORARY BLOWOFF OF WATERLINES. CONNECTIONS TO THE EXISTING WATERLINE(S) SHALL BE MADE WITH CLEAN, SWABBED PIPE AND FLUSHED UPON COMPLETION OF TIE-INS

21. REQUESTS FOR SHORT TERM WATER INTERRUPTIONS SHALL BE MADE TO THE CITY WATER DISTRIBUTION DIVISION AND WILL BE SUBJECT TO THEIR APPROVAL. THE CONTRACTOR SHALL GIVE WRITTEN NOTICE TO ANY PROPERTY OWNER, BUSINESS, AND/OR TENANTS THAT WILL HAVE WATER SERVICE INTERRUPTED AT LEAST 5 DAYS IN ADVANCE. SUCH NOTIFICATIONS SHOULD INDICATE THE TIME AND DATE THAT THE WATER WILL BE TURNED OFF AND WHEN THE SERVICE WILL BE RESTORED. NO BUSINESS, PROPERTY OWNER, AND/OR TENANTS SHALL BE WITHOUT WATER SERVICE FOR MORE THAN 8 HOURS. PROPOSED TIE IN LOCATIONS WHICH WILL AFFECT WATER SERVICE TO PROPERTY OWNERS SHALL BE PREFORMED DURING NON-PEAK HOURS.

22. THE CONTRACTOR MUST SCHEDULE THE CONNECTIONS TO THE EXISTING MAIN WITH THE CITY SUCH THAT THERE IS A MINIMUM DISRUPTION OF SERVICE. CONNECTIONS SHALL BE MADE DURING PERIODS OF LOW WATER USAGE. THE CONTRACTOR SHALL SUBMIT HIS PROPOSED SCHEDULE FOR COMPLETING WORK FOR CITY APPROVAL AT LEAST 10 DAYS PRIOR TO BEGINNING CONSTRUCTION.

23. DEFLECTIONS AT PIPE JOINT OR COUPLINGS SHALL NOT EXCEED THE PIPE MANUFACTURES RECOMMENDED MAXIMUM. WHERE DEFLECTIONS ARE GREATER THAN THE MAXIMUM ALLOWED, THE CONTRACTOR SHALL UTILIZE CIMJ LONG SLEEVE OR MULTIPLE JOINTS.

24. ANY EXISTING JOINT EXPOSED DURING EXCAVATION SHALL BE REPLACED IF WITHIN FOUR FEET OF PROPOSED JOINT.

25. VALVES 12 INCH AND LARGER ARE TO BE OPERATED BY THE CITY WATER DISTRIBUTION DIVISION, 48 HOURS OF ADVANCE NOTICE IS REQUIRED WITH THE WATER DISPATCH AT 316-291-8921.

26. ALL WET TAPS SHALL BE INSTALLED BY THE CITY OF WICHITA. THE CONTRACTOR WILL REIMBURSE THE CITY FOR TAPPING FEES.

27. THE CONTRACTOR SHALL PROTECT FROM DAMAGE AND SUPPORT EXISTING UTILITIES THROUGH CONSTRUCTION AS APPROVED BY THE UTILITY OWNER AND THE ENGINEER AT THE CONTRACTOR'S EXPENSE.

28. WORK DONE UNDER THIS PROJECT IS SUBJECT TO THE CITY OF WICHITA REQUIREMENTS FOR "CONSTRUCTION OF INFRASTRUCTURE IMPROVEMENTS BY PRIVATE CONTRACT". THE CONTRACTOR SHALL BE FAMILIAR AND COMPLY WITH ALL OF THE REQUIREMENTS, INCLUDING BONDING, INSPECTION, TESTING, NOTIFICATION, PROVIDING AS-BUILT DRAWINGS, PAYING FOR ALL NECESSARY CONNECTIONS, AND/OR STREET REPAIR FEES AND PROVIDING PIPE MATERIAL AND OTHER CERTIFICATIONS.

29. DEVELOPER FOR THIS PROJECT IS:
    TRINITY ACADEMY
    12345 E 21ST STREET N
    WICHITA, KS, 67206
    DAVE RADER, BUILDING AND GROUNDS DIRECTOR
    (316) 634-0909

J:\PROJECTS\2019\19010167_TRINITY ACADEMY_19167 CAD\SHTS\05 CIVIL\WTR\PPW\19167 PPW TITLE.DWG

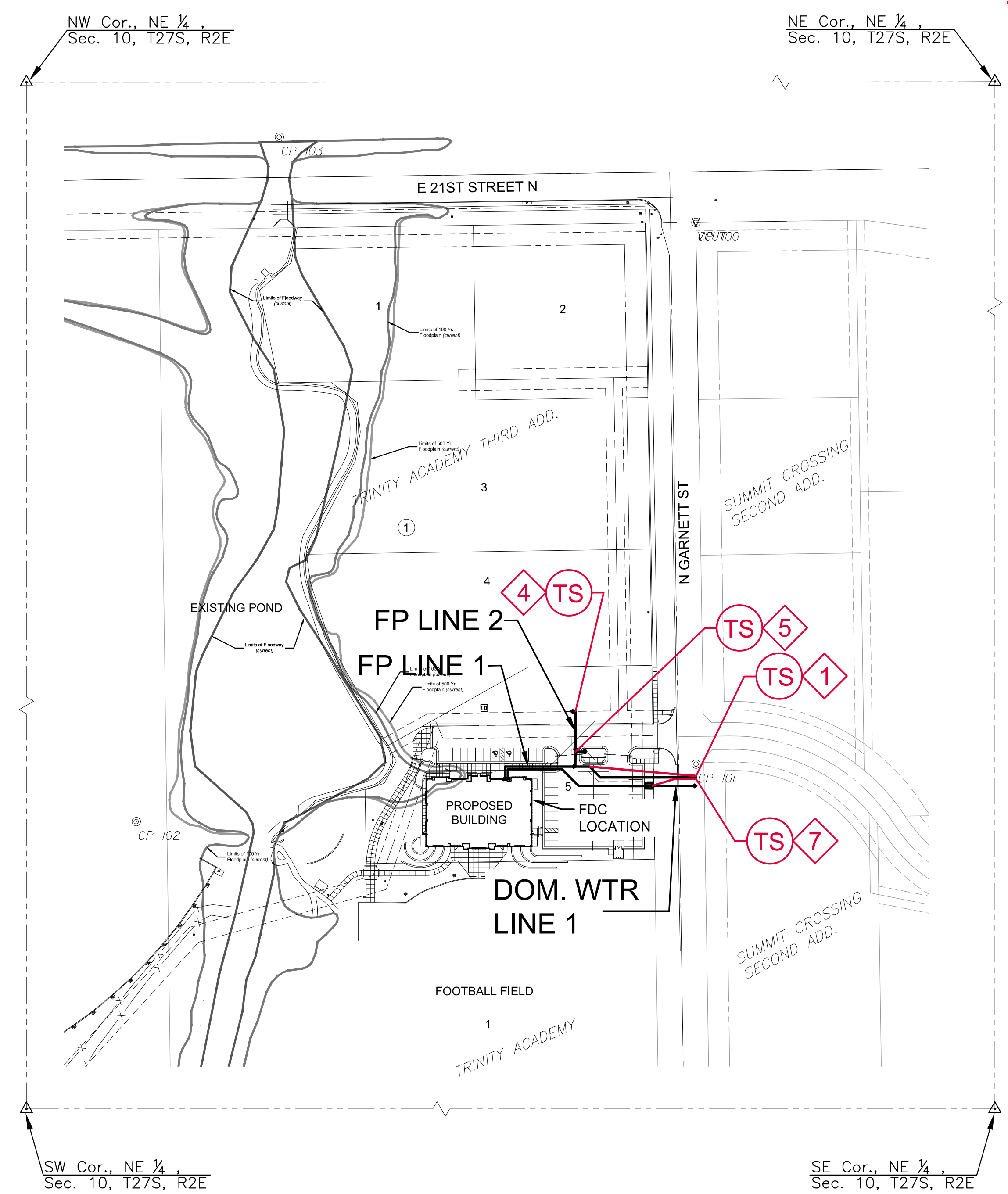

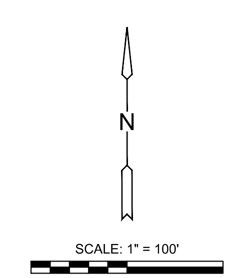

NOTE:
WATER LINE VALVES TO BE OPERATED BY CONTRACTOR ONLY IF WATER INSPECTOR IS ON SITE.

DATUM

1. The Horizontal Datum is based on the Kansas Coordinate System of 1983(2011), South Zone. Coordinates shown have been modified to the ground using a combined adjustment factor of 1.0001200144. State Plane coordinates can be calculated by multiplying the shown values by 0.99988.

2. All elevations shown are based on the NAVD 88 vertical datum.

BENCHMARKS

BM101
N:1699155.455 E:1690964.180 EL:1375.58
SQ cut top of curb S. return @ SE corner of Garnett & Shadybrook intersection

BM103
N:1699899.602 E:1690469.654 EL:1371.35
COW Disc 500' +/- west of Garnett St on N. side 21st Street. NW corner headwall of RCB.

Note:
All Control Points shown have elevations established using standard surveying procedures and can be used as temporary benchmarks. When using a Control point as a temporary benchmark, it is recommended that cross-checks be made to other control points or benchmarks to confirm elevations prior to use.

CONTROL POINTS

CP100
N:1699798.369 E:1690964.004 EL:1380.37
VCUT

CP101
N:1699155.455 E:1690964.180 EL:1375.58
SQ CUT +Cut Center

CP102
N:1699087.293 E:1690299.881 EL:1368.19
+CUT

CP103
N:1699899.602 E:1690469.654 EL:1371.35
COW DISC +CUT Center

CP 105
N:1698479.378 E:1690499.793 EL:1375.26
5/8" REBAR W/ RED MKEC CONTROL PT ID CAP

CP 106
N:1698375.469 E:1690790.313 EL:1375.59
5/8" REBAR W/ RED MKEC CONTROL PT ID CAP

CP 107
N:1698605.452 E:1689822.078 EL:1370.21
5/8" REBAR W/ RED MKEC CONTROL PT ID CAP

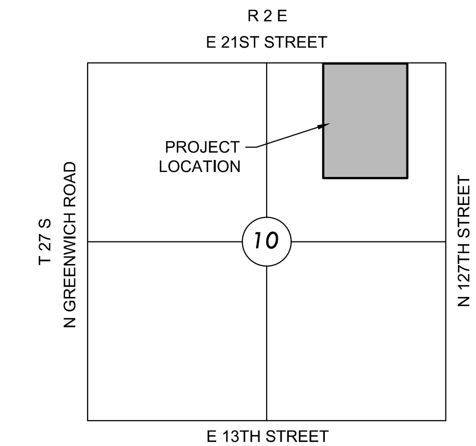

VICINITY MAP

No Scale

INDEX TO DRAWINGS

SHEET NO.	DESCRIPTION
01	TITLE SHEET
02 - 05	DETAILS
06	FP LINE 1 & LINE 2
07	DOM. WTR LINE 1
08 - 12	BMP DETAILS
13	FINAL PLAT

LEGEND

——W——	EXISTING WATER
————	PROPOSED WATER

APPROVED AS NOTED
BY WICHITA PUBLIC WORKS
ENGINEERING DIVISION
& BY WICHITA FIRE DEPARTMENT

Engineering: Seth Gatchey 3.10.2020
Utilities: Greg Foley 3-11-2020
Fire Department: [signature] 3-12-2020

NOTE TO CONTRACTORS

Public Property:

Inspection and testing for the water line is to be provided by a Licensed Consulting Engineering Firm under contract with the Owner/Developer. Said inspection to be in accordance with the City of Wichita standard construction engineering practices and certified by a Professional Engineer Licensed in the state of Kansas. No work shall be performed in dedicated easements or public rights-of-way by the Contractor without such inspection nor shall any work be commenced without written authorization by the City Engineer. All Construction and Materials shall comply with the City of Wichita Specifications and Standards and Special Provision (on file and available in the City Engineer's office) or on the City's Website.

Private Property:

Installation and testing for the fire protection line is to be performed by a City of Wichita licensed fire protection contractor in accordance with the fire codes as adopted by the City of Wichita. All material and construction practices for the fire protection line shall comply with the fire codes as adopted by the City of Wichita (available from the City of Wichita Fire Department). The contractor shall not commence work without notification and approval of the Wichita Fire Department. Inspection of the fire protection line is to be provided by a licensed Engineering Firm under contract with the Owner/Developer and the Fire Department. The contractor shall not start work until the project inspector is assigned to the project and present on the site. Any work done without inspection will be required to be uncovered for inspection.

An approved copy of these plans signed by City staff is required on-site.

NOTE: ALL LINES TO BE INSTALLED BY OTHERS ARE SUBJECT TO MABCD REVIEW.

NOTE: CONTRACTOR TO VERIFY DEPTH AND LOCATION OF EXISTING UTILITIES PRIOR TO CONSTRUCTION.

MKEC
Wichita, KS • 316-684-9600

PRIVATE WATER DISTRIBUTION PLANS FOR
TRINITY ACADEMY THIRD ADDITION
WICHITA, KANSAS

©2021
MKEC Engineering
All Rights Reserved
www.mkec.com
These drawings and their contents, including, but not limited to, all concepts, designs, & ideas are the exclusive property of MKEC Engineering (MKEC), and may not be used or reproduced in any way without the express consent of MKEC.

PPW TITLE SHEET

PROJECT NO.	PPW-2020-005236
DATE	MAR. 2020
SCALE	1"=100'

DESIGNED	DRAWN	CHECKED
MKB	MKB	SPE

NO.	REVISION	DATE

SHEET NO.
01 OF 13

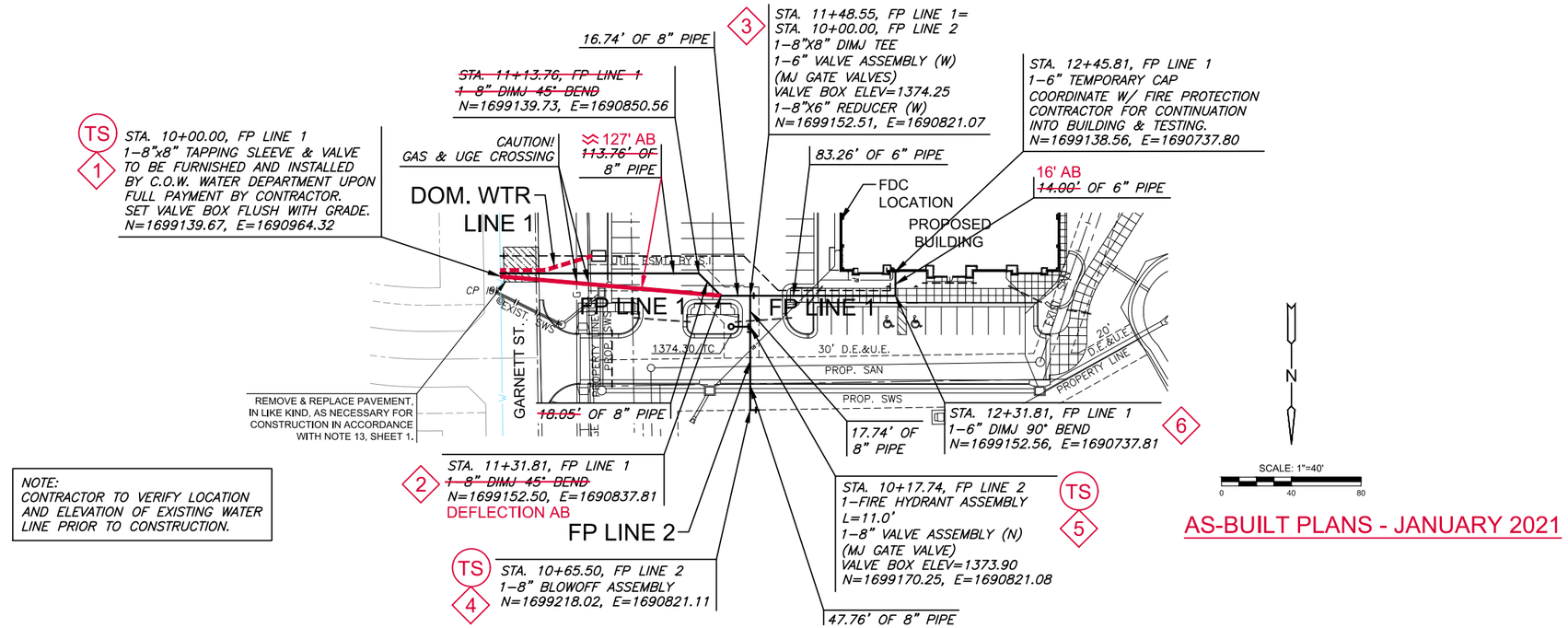

AS-BUILT PLANS - JANUARY 2021

PLAN FP LINE 1

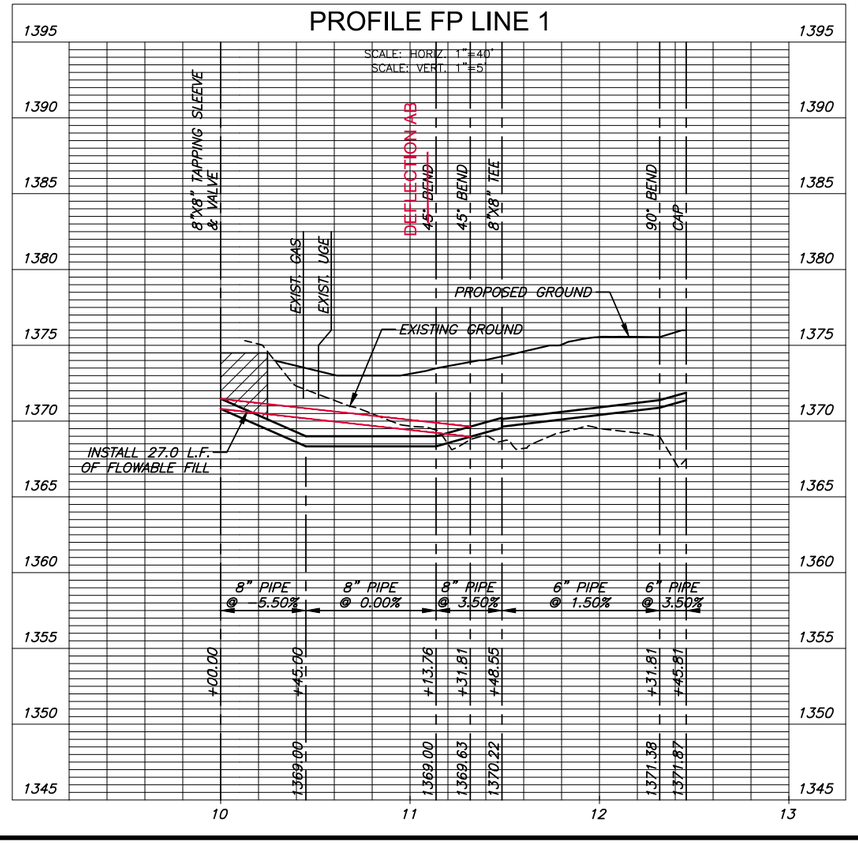

PLAN FP LINE 2

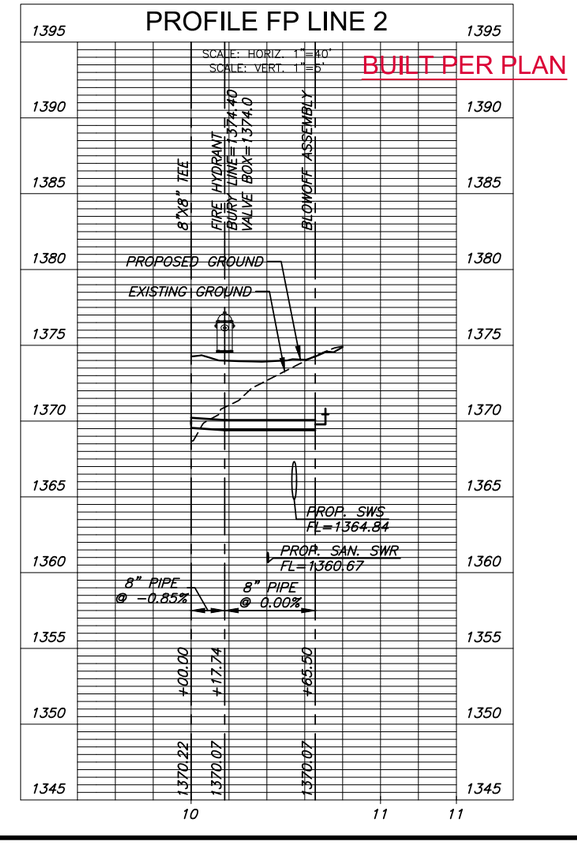

MKEC
Wichita, KS • 316-684-3600

WATER DISTRIBUTION PLANS FOR

TRINITY ACADEMY THIRD ADDITION

WICHITA, KANSAS

©2021
MKEC Engineering
All Rights Reserved
www.mkec.com
These drawings and their contents, including, but not limited to, all concepts, designs, & ideas are the exclusive property of MKEC Engineering (MKEC), and may not be used or reproduced in any way without the express consent of MKEC.

FIRE PROTECTION LINE 1 & LINE 2

PROJECT NO.	PPW-2020-005236
DATE	MAR. 2020
SCALE	1"=40'

DESIGNED	DRAWN	CHECKED
MKB	MKB	SPE

NO.	REVISION	DATE

SHEET NO.
06 OF 13

PLOTTED: Thursday, January 07, 2021 @ 04:00PM
J:\PROJECTS\2019\190101067_TRINITY ACADEMY_19167 CAD\SHTS\05 CIVIL\WTR\PPW19167 WTR 01.DWG

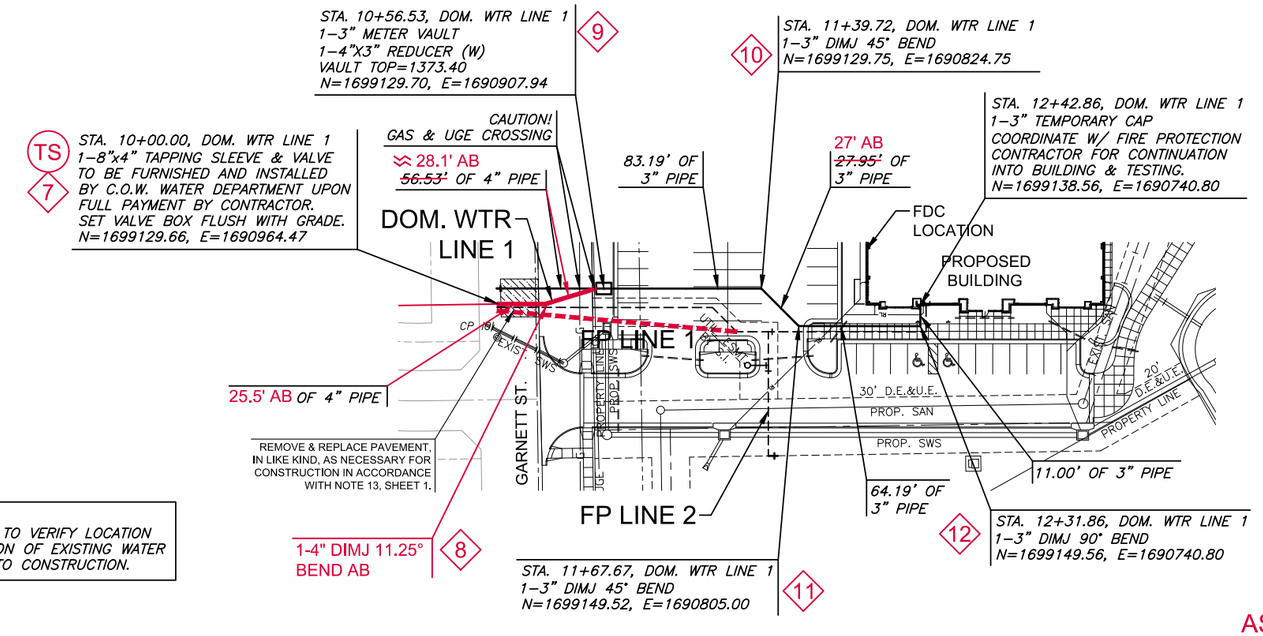

NOTE:
CONTRACTOR TO VERIFY LOCATION AND ELEVATION OF EXISTING WATER LINE PRIOR TO CONSTRUCTION.

N

SCALE: 1"=40'
0 40 80

AS-BUILT PLANS - JANUARY 2021

PLAN DOM. WTR LINE 1

PROFILE DOM. WTR LINE 1

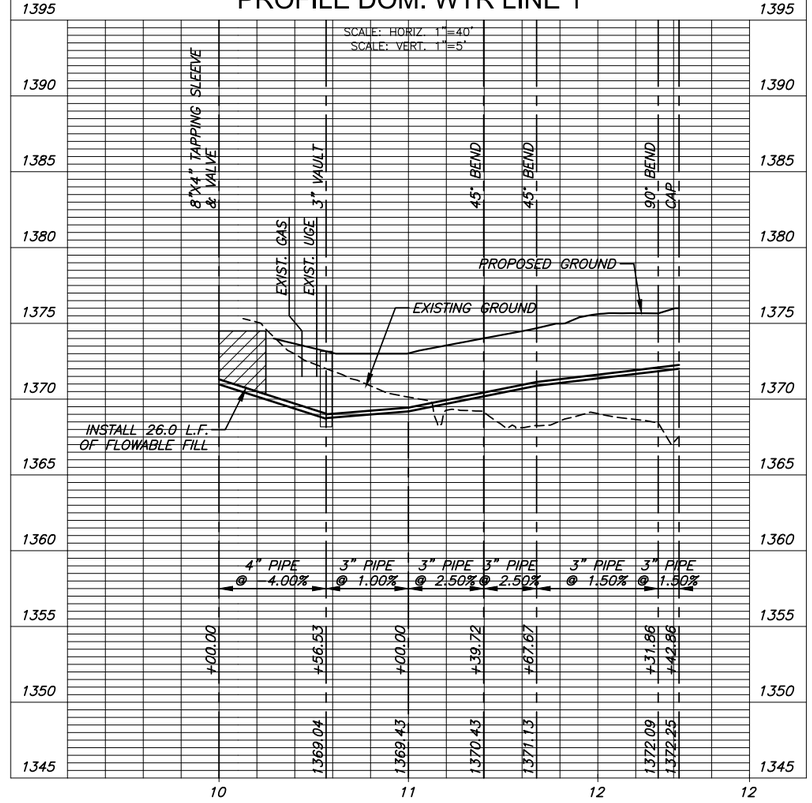

	NO.	DESCRIPTION	APPROXIMATE LOCATION
TS	1	8"x8" TAPPING SLEEVE & VALVE	21.4' E. OF CL GARNETT ST. ALONG EXTENDED PRIVATE DRIVE BACK OF CURB & 61.8' S.
	2	DEFLECTION	105.1' W. OF CL GARNETT ST. ALONG PRIVATE DRIVE BACK OF CURB & 50.7' S.
	3	8"X8" DIMJ TEE	121.8' W. OF CL GARNETT ST. ALONG PRIVATE DRIVE BACK OF CURB & 50.7' S.
TS	4	8" BLOWOFF ASSEMBLY	121.8' W. OF CL GARNETT ST. ALONG PRIVATE DRIVE BACK OF CURB & 14.8' N.
TS	5	FIRE HYDRANT ASSEMBLY	121.8' W. OF CL GARNETT ST. ALONG PRIVATE DRIVE BACK OF CURB & 33.0' S.
	6	6" DIMJ 90° BEND	205.1' W. OF CL GARNETT ST. ALONG PRIVATE DRIVE BACK OF CURB & 50.7' S.
TS	7	8"x8" TAPPING SLEEVE & VALVE	21.5' E. OF CL GARNETT ST. ALONG PRIVATE DRIVE BACK OF CURB & 65.3' S.
	8	4" DIMJ 11.25° BEND	3.8' W. OF CL GARNETT ST. ALONG PRIVATE DRIVE BACK OF CURB & 65.1' S.
	9	3" METER VAULT	34.9' W. OF CL GARNETT ST. ALONG PRIVATE DRIVE BACK OF CURB & 73.5' S.
	10	3" DIMJ 45° BEND	118.1' W. OF CL GARNETT ST. ALONG PRIVATE DRIVE BACK OF CURB & 73.5' S.
	11	3" DIMJ 45° BEND	137.9' W. OF CL GARNETT ST. ALONG PRIVATE DRIVE BACK OF CURB & 53.7' S.
	12	3" DIMJ 90° BEND	202.1' W. OF CL GARNETT ST. ALONG PRIVATE DRIVE BACK OF CURB & 53.7' S.

MKEC
Wichita, KS • 316-684-3600

WATER DISTRIBUTION PLANS FOR

TRINITY ACADEMY THIRD ADDITION

WICHITA, KANSAS

©2021
MKEC Engineering
All Rights Reserved
www.mkec.com
These drawings and their contents, including, but not limited to, all concepts, designs, & ideas are the exclusive property of MKEC Engineering (MKEC), and may not be used or reproduced in any way without the express consent of MKEC.

DOMESTIC WATER LINE 1

PROJECT NO.	PPW-2020-005236
DATE	MAR. 2020
SCALE	1"=40'

DESIGNED	DRAWN	CHECKED
MKB	MKB	SPE

NO.	REVISION	DATE

SHEET NO.
07 OF 13

PLOTTED: Thursday, January 07, 2021 @ 03:55PM

J:\PROJECTS\2019\190101067_TRINITY ACADEMY_19167 CAD\SHTS\05 CIVIL\WTR\PPW\19167 WTR 02.DWG

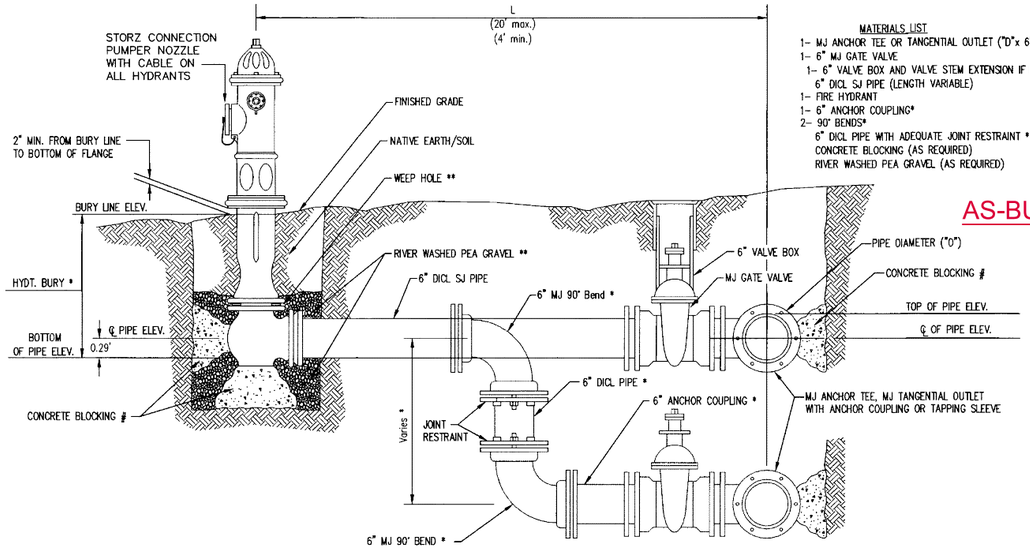

MATERIALS LIST
1- MJ ANCHOR TEE OR TANGENTIAL OUTLET ("D"x 6")
1- 6" MJ GATE VALVE
1- 6" VALVE BOX AND VALVE STEM EXTENSION IF REQUIRED *
6" DICL SJ PIPE (LENGTH VARIABLE)
1- FIRE HYDRANT
1- 6" ANCHOR COUPLING*
2- 90° BENDS*
6" DICL PIPE WITH ADEQUATE JOINT RESTRAINT *
CONCRETE BLOCKING (AS REQUIRED)
RIVER WASHED PEA GRAVEL (AS REQUIRED)

* IF THE REQUIRED HYDRANT BURY IS IN EXCESS OF 5', BUT LESS THAN 7', CONTRACTOR SHALL USE STANDARD 5' HYDRANT BURY AND HYDRANT BARREL EXTENSIONS AS NECESSARY. IF THE REQUIRED HYDRANT BURY IS GREATER THAN 7', CONTRACTOR SHALL USE 5' HYDRANT BURY, 2-MJ 90° BENDS, 6" ANCHOR COUPLING AND 6" DICL PIPE AS NECESSARY FOR VERTICAL ADJUSTMENT. THE CONTRACTOR SHALL PROVIDE ADEQUATE THRUST BLOCKING AT HYDRANT AND MEGALUGS, OR SIMILAR RESTRAINT BETWEEN 90° BENDS TO SECURE ALL FITTINGS DURING TESTING AND OPERATION. THE CONTRACTOR SHALL PROVIDE A VALVE STEM EXTENSION PER DETAIL THIS SHEET.

** CAUTION: WEEP HOLES TO BE KEPT CLEAR DURING CONSTRUCTION AND BACKFILL. CONCRETE FOR THRUST BLOCKING SHALL NOT OBSTRUCT WEEP HOLES. PLACE 1 CUBIC FOOT OF RIVER WASHED PEA GRAVEL AROUND EACH WEEP HOLE.

\# CONCRETE THRUST BLOCKING SHALL BE KEPT CLEAR OF BOLTS, NUTS, AND MJ ACCESSORIES.

FIRE HYDRANT ASSEMBLY

PER CITY OF WICHITA SPECIFICATIONS

AS-BUILT PLANS - JANUARY 2021

FIRE HYDRANTS REQUIRED				
STATION	BURY LINE ELEVATION	TOP OF PIPE ELEVATION	FIRE HYDRANT BURY REQUIRED*	VALVE STEM EXT. REQUIRED (ft)*
10+17.74, FPLINE2	1374.40	1370.07	5.0	N/A

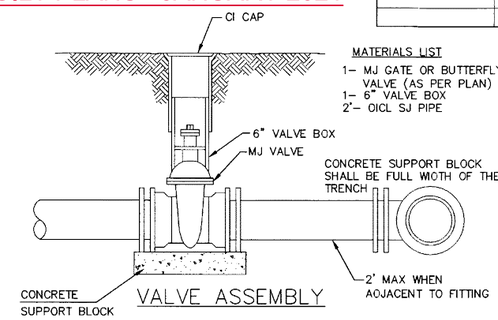

MATERIALS LIST
1- MJ GATE OR BUTTERFLY VALVE (AS PER PLAN)
1- 6" VALVE BOX
2'- DICL SJ PIPE

VALVE ASSEMBLY

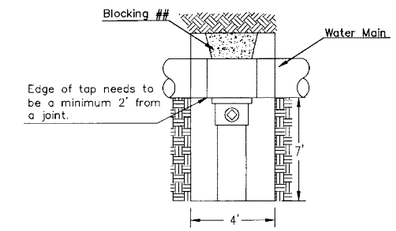

CITY TAP

When the City of Wichita makes tap, blocking is to be done by Contractor

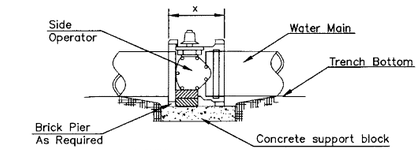

NOTES

1. This detail covers Butterfly Valve installation, inclusive, regardless of type of pipe or joint used. 24" and larger lines to be detailed on plans.
2. 6" Valve Box and Cover required per City of Wichita Std. Specifications.
3. Conc. Support Block to be full width of trench.

CONCRETE SUPPORT BLOCKING FOR BUTTERFLY VALVE INSTALLATION

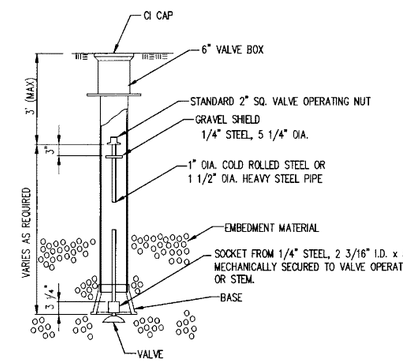

VALVE STEM EXTENSION DETAIL

NOTE: ONE VALVE STEM EXTENSION FOR EACH VALVE BURIED GREATER THAN 5'.

MATERIALS LIST
1-MJ CATE OR BUTTERFLY VALVE (AS PER PLAN)
1-MJ ANCHOR COUPLING (12" OR SMALLER)
1-6" VALVE BOX
CONCRETE SUPPORT BLOCK SHALL BE FULL WIDTH OF THE TRENCH

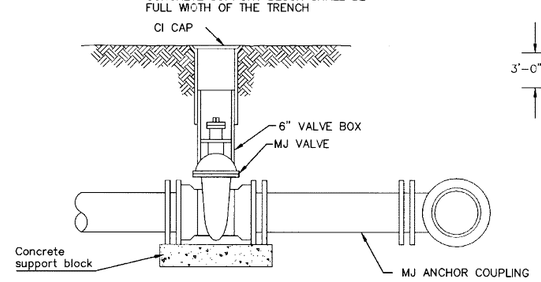

ANCHORED VALVE ASSEMBLY

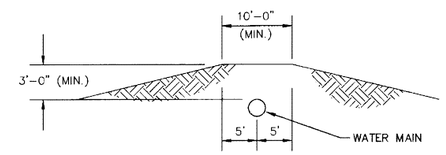

PROTECTIVE FILL DETAIL

MINIMUM PROTECTIVE FILL SHALL BE PROVIDED IN ALL INSTANCES WHERE COVER OVER THE PROP. WATER LINE IS LESS THAN 3'.
(COST SUBSIDIARY TO PIPE INSTALLATION)

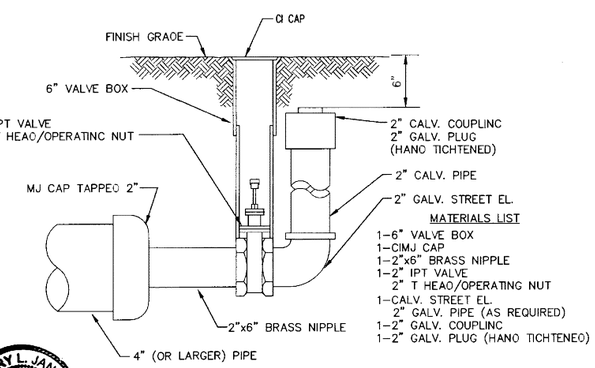

MATERIALS LIST
1-6" VALVE BOX
1-CIMJ CAP
1-2"x6" BRASS NIPPLE
1-2" IPT VALVE
2" T HEAD/OPERATING NUT
1-CALV. STREET EL.
2" GALV. PIPE (AS REQUIRED)
1-2" GALV. COUPLING
1-2" GALV. PLUG (HAND TIGHTENED)

2" BLOWOFF ASSEMBLY

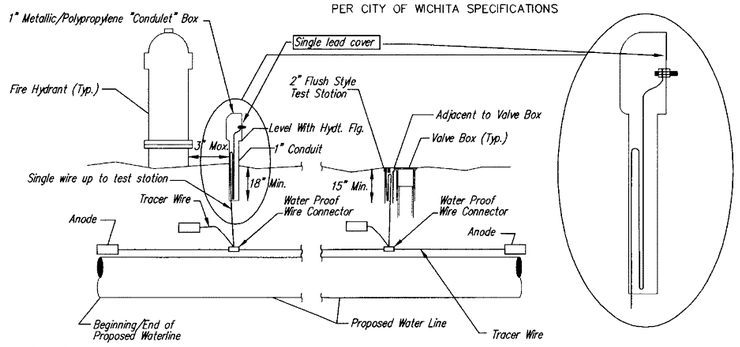

TRACER WIRE

Conductive type pipe locator/tracer wire shall be install to locate all waterline pipe regardless of pipe material. The wire shall extend the entire length of the proposed pipe. The wire shall be taped to the waterline and pulled with the pipe. A waterproof connector shall be used at splice locations. A complete list of approved tracer wire and waterproof connectors can be found on the City of Wichita's website at www.wichita.gov.

WIRE

The tracer wire shall be Blue No. 12 AWG CCS with 45 mil HDPE insulation. To allow for grade adjustment, a minimum of 12" of excess wire shall be coiled at the bottom of the test station for all wires. Wire connectors shall be installed per manufacturer recommendations. Contractor shall attach wire being installed with proposed water main to any tracer wire installed with adjacent waterline projects.

TEST STATIONS

*The test station for fire hydrant application shall be a 1" "condulet" style station as manufactured by AGRA Industries with a removable solid cover having a single lead extending from the face or approved equal. The "conduit" style test station shall be attached to a 1" rigid galvanized conduit with a minimum length of 36" and plastic end bushing. The flush style shall have the word "WATER" stamped or molded into the lid. The test station for valve applications shall be a 2" flush style test station with wire connector on lid. Model # T2PH7B1LP Handley Industries or CD14*TP SnakePit as manufactured by Copperhead Industries or approved equal. The flush style shall have the word "WATER" stamped or molded into the lid. All test stations shall be manufactured using molded blue tops or sufficiently cooted with blue enamel paint. The tracer wire and the anode wire shall be install to allow 12" of wire within the test station. The location of all test stations shall be recorded, and shown in the as-built drawings. Flush style test stations shall not be installed in pavement or sidewalk unless approved by the Engineer. Contractor shall extend tracer wire & move flush mount test station to nearest location out of pavement or sidewalk.*

ANODES

The anodes shall be 3 lb. bare zinc or magnesium. The anodes shall be buried at the same elevation as the waterline at each test station. The anodes shall be connected to 12 AWG CCS which shall be extended to the test station.

TRACER WIRE DETAIL

COST IS SUBSIDIARY TO PIPE INSTALLATION

MATERIALS LIST
1-MJ GATE OR BUTTERFLY VALVE (AS PER PLAN)
1-CIMJ CAP WHEN NECESSARY
1-6" VALVE BOX
20' OF PIPE (BID WITH PIPE)
2 - #6 REINF. BARS
CONCRETE SUPPORT BLOCK SHALL BE FULL WIDTH OF THE TRENCH

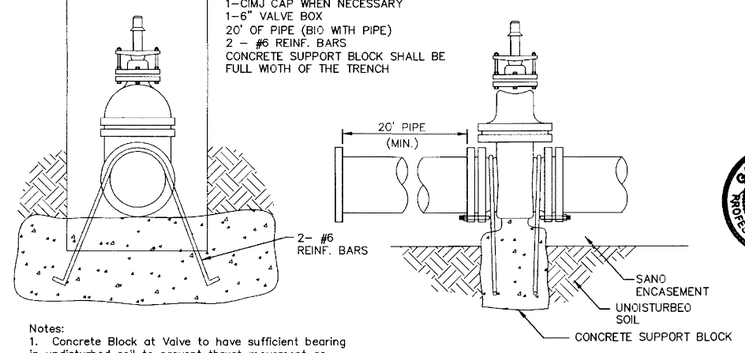

Notes:
1. Concrete Block at Valve to have sufficient bearing in undisturbed soil to prevent thrust movement as shown in table at right. Field Engineer to determine thrust loading of undisturbed soil and final size of thrust block.
2. The thrust block shall be constructed such that bolts, nuts, and other MJ accessories are kept clear of concrete.
3. All valves at dead ends and at other locations as called out on the plans shall be blocked as shown here.

THRUST AT VALVES	
VALVE	THRUST AT 150 #/in²
4"	1809 lbs.
6"	4245 lbs.
8"	7540 lbs.
12"	16965 lbs.

ANCHORED VALVE ASSEMBLY, SPECIAL

GARY L. JANZEN LICENSED 16294 KANSAS PROFESSIONAL ENGINEER
10/27/16

REVISED: OCTOBER 2016

CITY OF WICHITA
PUBLIC WORKS & UTILITIES ENGINEERING DIVISION

STANDARD WATER ASSEMBLY DETAIL

CITY ENGINEER
GARY JANZEN, P.E.

PROJECT NUMBER	OCA NUMBER	DATE
PPW-2020-005236	183021	MAR. 2020

CITY ENGINEER'S OFFICE
CITY HALL - SEVENTH FLOOR
455 NORTH MAIN STREET
WICHITA, KANSAS 67202-1620
(316) 268-4501

SHEET
02 OF 13