FHWA REGION NO.	STATE	PROJECT NO.	YEAR	SHEET NO.	TOTAL SHEETS
7	KANSAS	618-34	1998	54	160

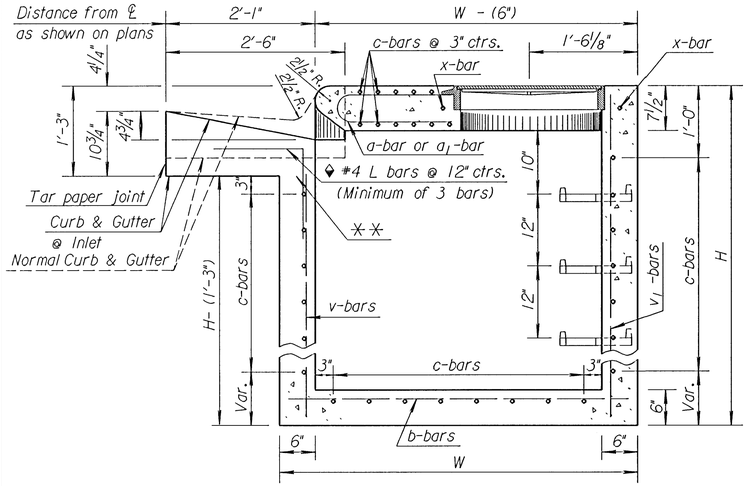

SECTION A-A

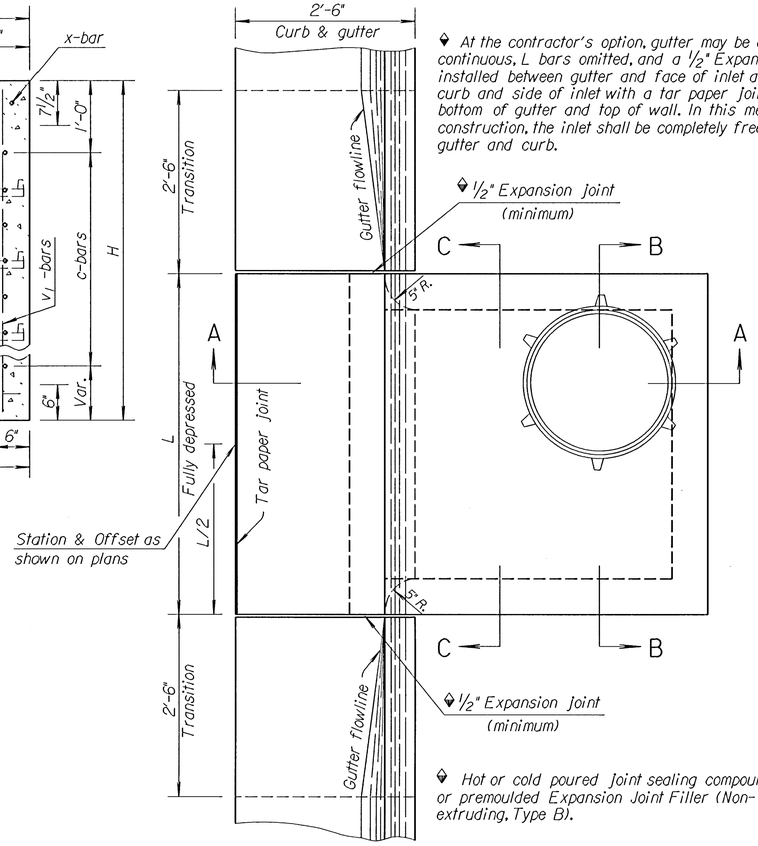

PLAN

◆ At the contractor's option, gutter may be constructed continuous, L bars omitted, and a 1/2" Expansion joint installed between gutter and face of inlet and between curb and side of inlet with a tar paper joint between bottom of gutter and top of wall. In this method of construction, the inlet shall be completely free of the gutter and curb.

◆ 1/2" Expansion Joint (minimum)

◆ Hot or cold poured joint sealing compound, or premoulded Expansion Joint Filler (Non-extruding, Type B).

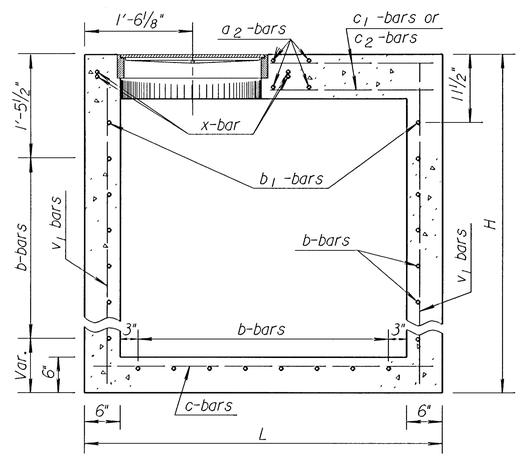

SECTION B-B

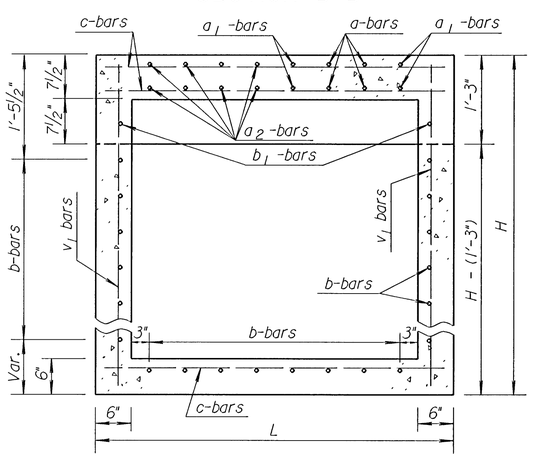

SECTION C-C

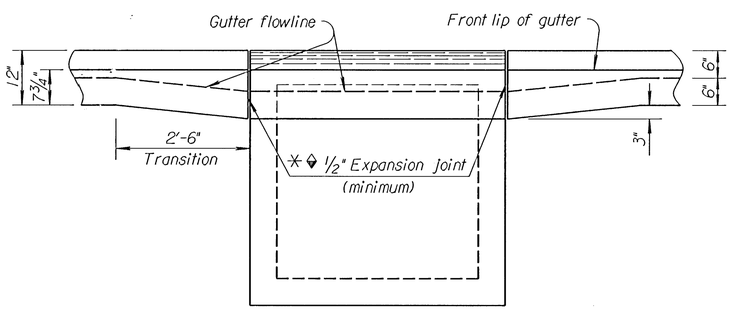

ELEVATION

Note: Transition gutter from normal depth of 6" to 9" at inlet in 2'-6". Curb and Gutter sections shall be shaped as shown where required by the installation of curb inlets. This work will be subsidiary to other bid items.

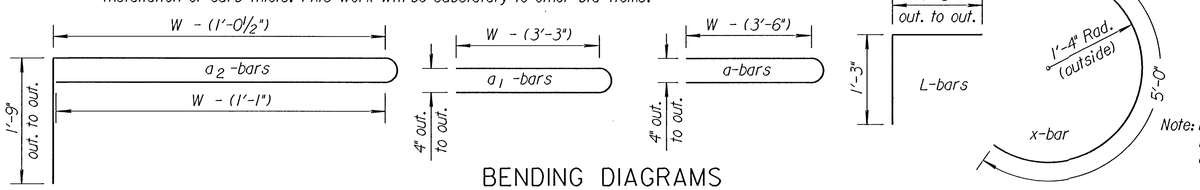

BENDING DIAGRAMS

Note: Reinforcing steel for L bars is not included in the steel quantity and is subsidiary to the other inlet items.

GENERAL NOTES

Use Class A Concrete throughout. All exposed edges shall be finished with an edging tool.

At the contractors option Class A Concrete (AE) or mix used in concrete pavement may be used throughout.

In general, pipes will enter and leave manhole at various positions. Where possible bend bars around pipes.

Floor of manhole to be shaped as shown in various "EXAMPLES" with unreinforced Class "A" Concrete.

Manhole opening and steps, where used, shall be placed to afford easy access to top of shaped invert. Top reinforcing bars to be adjusted accordingly.

All castings shall be gray iron and shall comply with the KDOT Standard Specifications.

When so ordered by the Engineer, the top of the manhole shall be sloped slightly to approximately fit the ground line or other conditions.

Dimensions and weights of cast iron as shown on this sheet are minimum. Larger dimensions and/or heavier weights of cast iron may be used.

Steps shall be installed in all storm sewer inlets when specified in the plans or when "H" is equal to or greater than six feet. Steps shall comply with the KDOT Standard Specification.

No reduction in concrete quantities shall be made for pipe openings.

When directed by the Engineer, a small opening in the back of the inlet shall be provided in order to drain a low area. Reinforcing bars shall extend through the opening. No reduction in concrete quantities will be made for this opening.

No addition in concrete quantities shall be made for shaping floor of inlet.

No reduction in pay length of curb, gutter, or curb & gutter will be made through the inlet area.

The weight of castings includes no allowance for fillets and overruns.

Curb and Gutter sections shall be shaped as shown where required by the installation of curb inlets. This work shall be subsidiary to other bid items.

See sheet entitled "Reinforcing Steel for Inlets and Manholes" for details and quantities.

For additional notes and details on Light Type Cast Iron Manhole Cover and Ring Type C and Cast Iron Steps, see Standard RD633 "Reinforced Concrete Manhole".

All reinforcing steel shall be #4 at 6" centers except where noted. Minimum clear distance to reinforcement shall be 1 1/2".

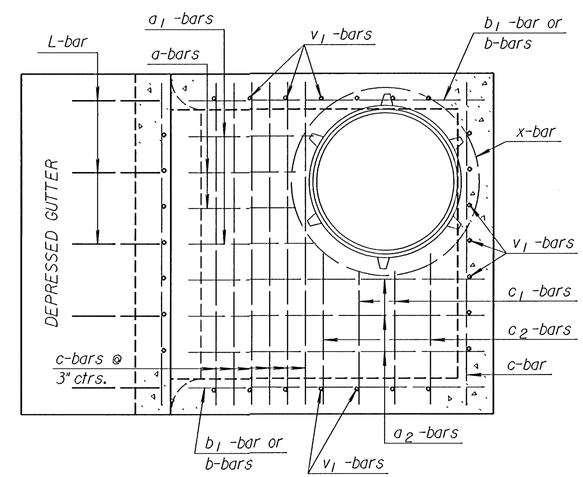

Reinforcing Steel Top View

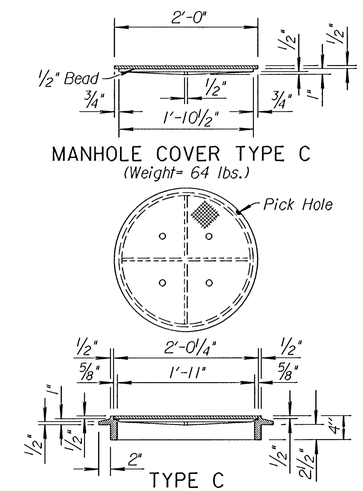

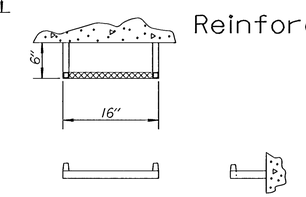

STEP DETAILS

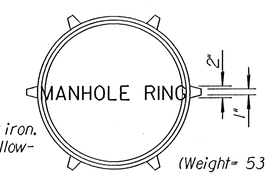

NOTE: All manhole castings are cast iron. Weight of castings includes no allowance for fillets and overruns.

(Weight= 53 lbs.)

*LIGHT TYPE MANHOLE COVER & RING

*Rings with four equally spaced lugs will be permitted.

NO.	DATE	REVISIONS	BY	APP'D
3	12-8-94	Added misc. notes	R.J.S.	J.O.B.
2	12-27-93	Delete paint note	R.J.S.	J.O.B.
1	1-30-92	Rev. paint&step notes, ent. on CADD	R.J.S.	J.O.B.

KANSAS DEPARTMENT OF TRANSPORTATION

TYPE 22 CURB INLET

RD646

FHWA APPROVAL	1-12-95	APP'D. James O. Brewer	
DESIGNED	DETAILED	QUANTITIES	TRACED Bowser
DESIGN CK.	DETAIL CK.	QUAN.CK.	TRACE CK. Seitz

Drawn By: KJOI | Plotted by: maf 7-24-97
DGN File: s:/1995/952997/0002/standard/rd646.dgn