PROJECT NO.	YEAR	SHEET NO.	TOTAL SHEETS
618-34	1998	75	169

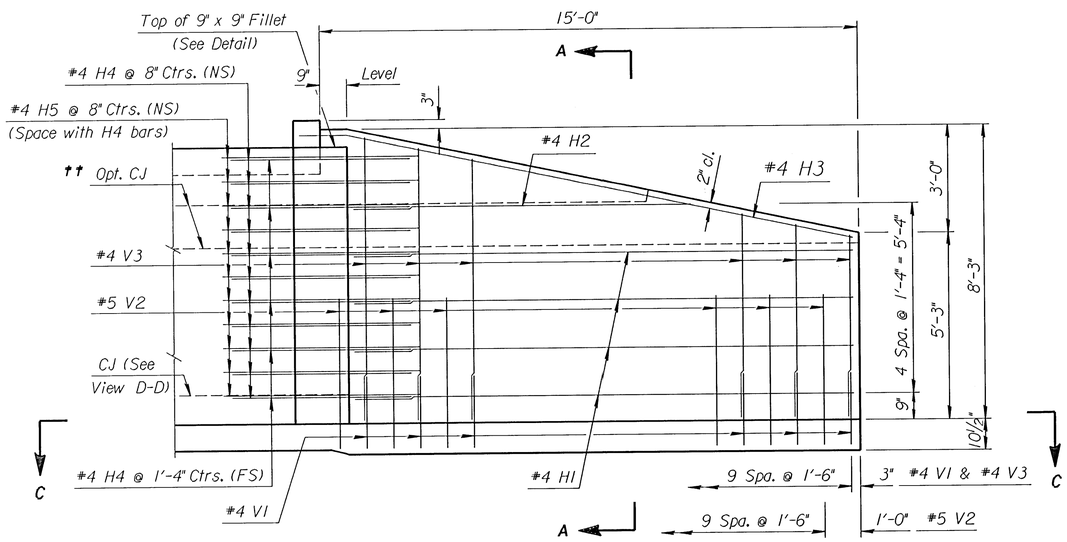

†† See RCB Details for location of construction joint.

ELEVATION OF WINGWALL
(Backface Shown)

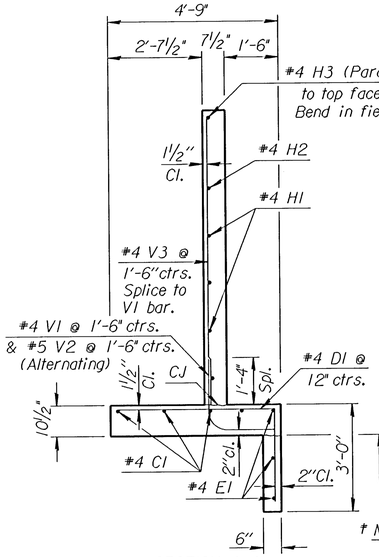

SECTION A-A

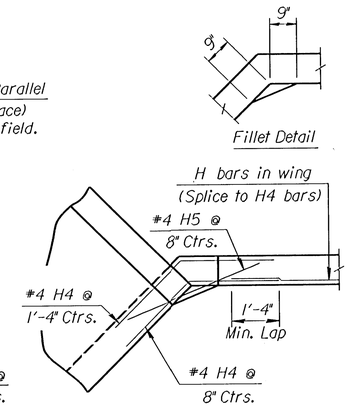

DETAIL OF 9" x 9" FILLET
(Plan View)

† NOTE: Const. Jt. may be used at Contractor's option when approved by the Engineer. D1 bars or mesh may be spliced thus: Minimum overlap shall be 1'-3". No increase in quantities or cost shall be allowed when Contractor elects this option.

GENERAL NOTES

UNIT STRESSES: Class AAA Concrete; f'c = 4,000 p.s.i.
Reinforcing Steel; fy = 60,000 p.s.i.

CONCRETE: Class AAA Concrete shall be used throughout. Bevel all exposed edges with a ¾ inch triangular moulding.

REINFORCING: All reinforcing shall conform to ASTM A615, Grade 60. Welded Wire Fabric shall conform to ASTM A185. All dimensions relative to reinforcing steel shall be to center-line of bar unless otherwise noted.

QUANTITIES: Wingwall Quantities include all quantities outside the neat lines of the box, excluding the hubguard.

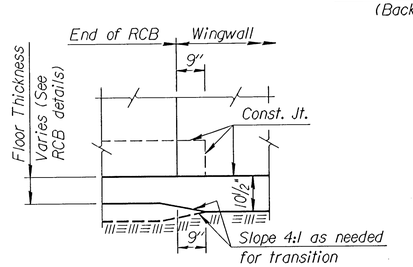

VIEW D-D

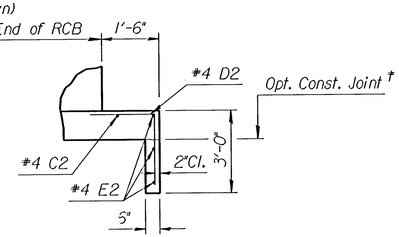

SECTION E-E

NOTE:
EF = Each Face
NS = Near Side
FS = Far Side
CJ = Const. Joint

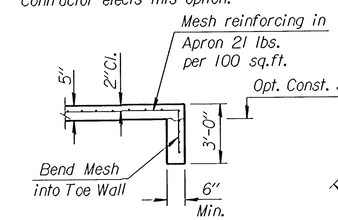

SECTION B-B

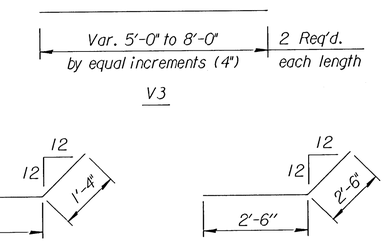

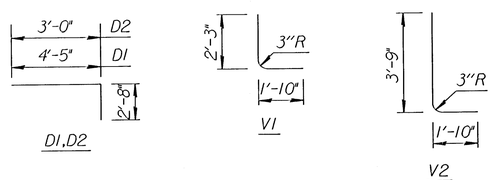

BENDING DIAGRAM
(All dimensions are out to out of bars.)

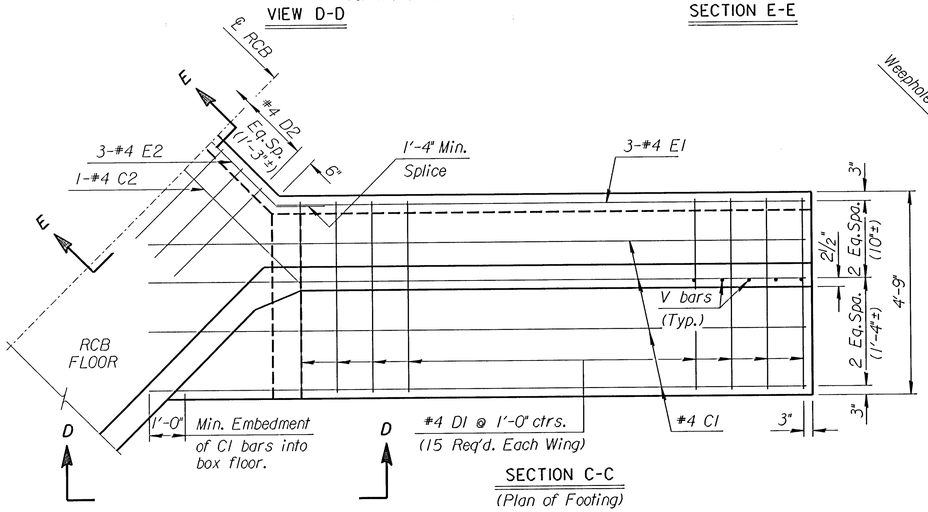

SECTION C-C
(Plan of Footing)

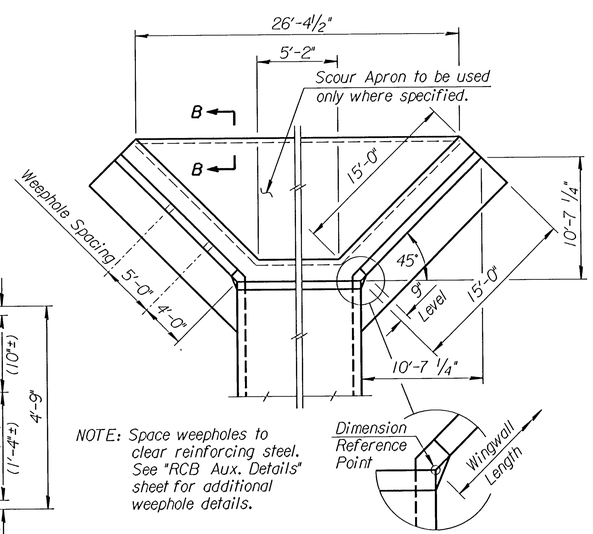

NOTE: Space weepholes to clear reinforcing steel. See "RCB Aux. Details" sheet for additional weephole details.

WING DIMENSIONS FOR NORMAL BOX
(3½:1 Embankment Slope)

Quantities listed below are included in the Summary of Quantities shown on the RCB details on Sh. No. 74.

WINGWALL QUANTITIES (One End Only)		
Class AAA Concrete:		
Wingwalls	11.39	CY.
Apron	0.00	CY.
Soil Saver	0.00	CY.
Reinforcing Steel	865.80	Lbs.
Welded Wire Fabric	0.00	Lbs.

NOTE: Reinforcing Bar List is for both wings at one end of box only.

✱ See Bending Diagram

	Mark	#4C1	#4D1	#4E1	#4C2	#4D2	#4E2	#4V1	#5V2	#4V3	#4H1	#4H2	#4H3	#4H4	#4H5
0° Skew	Number	8	30✱	6	1	4✱	3✱	20✱	20✱	20	8	2	2	34✱	22
	Length	18'-3"	7'-1"	14'-9"	7'-10"	5'-8"	8'-1"	4'-1"	5'-7"	✱	13'-10"	9'-6"	15'-10"	5'-0"	3'-6"

NO.	DATE	REVISIONS	BY	APP'D

KANSAS DEPARTMENT OF TRANSPORTATION
Sta. 65+89

FLARED WINGWALLS
7 FT. RISE (0°SKEW)

~~BR 10.00.07~~ SEDGWICK CO.

FHWA APPROVAL	6-5-91	APP'D	KENNETH F. HURST
DESIGNED	DETAILED	QUANTITIES	TRACED
DESIGN CK.	DETAIL CK.	QUAN.CK.	TRACE CK.

VERSION: 5.1.0 COMPILED: 03/01/95

DESIGN: DESIGN, DETAIL, QUANTITIES, TRACING, RETRACED — DATE
CHECK: DATE

DGN File: h:/1995/95297/002/7x7rcb.dgn
Plotted by: DJM 11-5-97 View=