PROJECT NO.	SHEET NO.	TOTAL SHEETS
472-76-245-82324-000-000-001	14	20

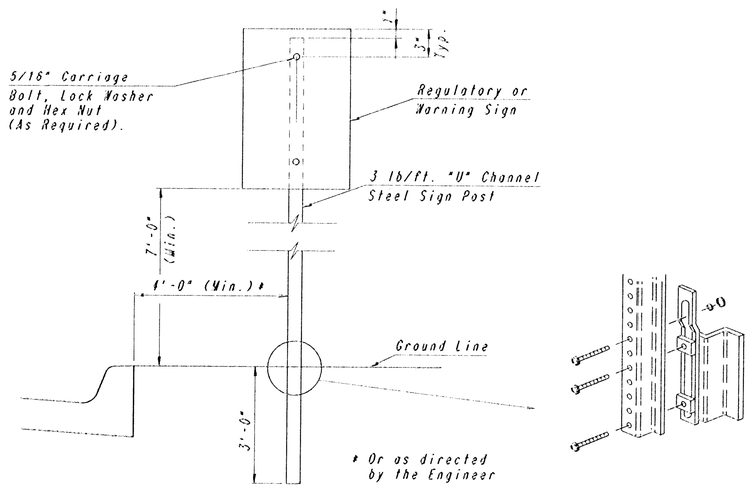

TYPICAL TRAFFIC CONTROL SIGN INSTALLATION
CURB AND GUTTER SECTION

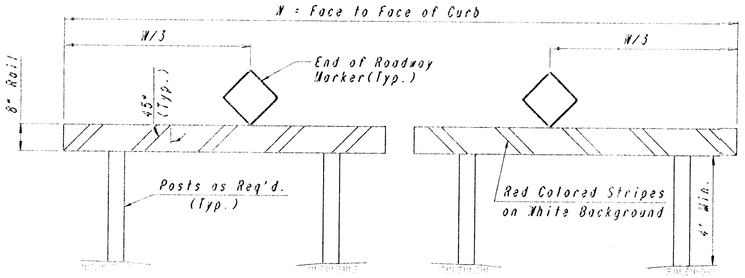

TYPE I BARRICADE DETAIL W/ E.O.R. MARKER

DETAIL A
6 3/4" STANDARD

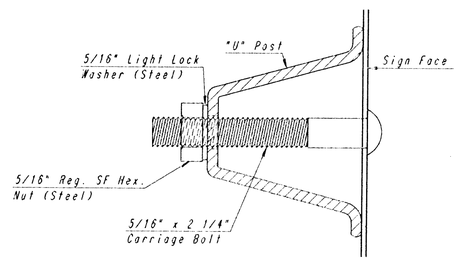

TRAFFIC CONTROL SIGN MOUNTING DETAIL

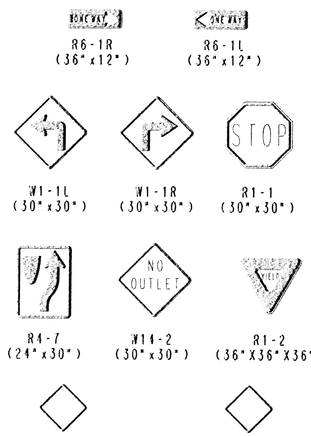

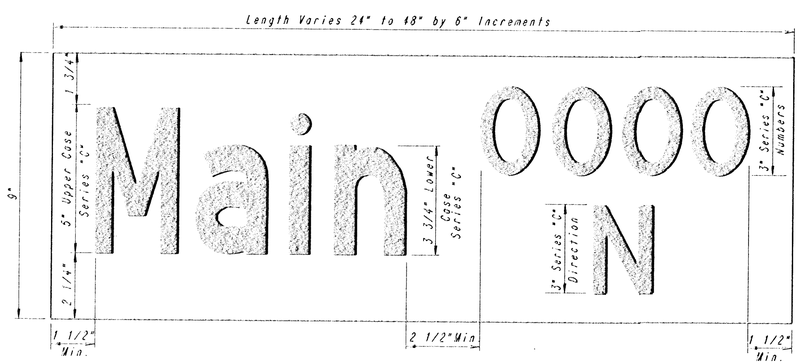

DETAIL B
9" METRO

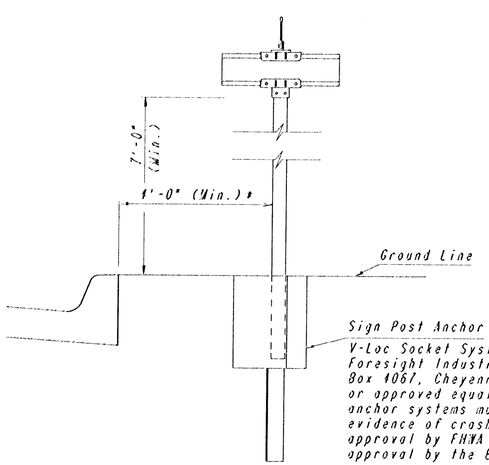

TYPICAL STREET NAME SIGN INSTALLATION
CURB AND GUTTER SECTION

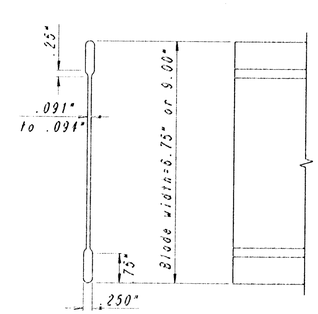

STREET NAME SIGN
BLADE DETAILS

STREET	STATION	OFFSET	SIGN	QUANTITY #
WILD ROSE	17+92	22' RT	STREET NAME	1
WILD ROSE	24+92	8' LT	EOR	1
WILD ROSE	24+98	6' RT	EOR	1
TOTAL				3

FOR INFORMATION ONLY

STREET NAME	NO. BLADES REQ'D.	
	6 3/4" STD.	9" METRO
Wild Rose	1	
Wild Rose Ct (3102-3126)		1

GENERAL NOTES - SIGNING

NOTE: REFERENCES BELOW TO "STANDARD SPECIFICATIONS" DENOTE "STANDARD SPECIFICATION FOR STATE ROAD AND BRIDGE CONSTRUCTION, EDITION 1990" BY THE KANSAS DEPARTMENT OF TRANSPORTATION.

1. POST ANCHORS. POSTS SHALL BE ANCHORED WITH A YIELDING BASE POST SUPPORT AS DETAILED.

2. POSTS FOR TRAFFIC CONTROL SIGNS. POSTS SHALL CONFORM TO THE REQUIREMENTS OF SUBSECTION 1620 OF THE STANDARD SPECIFICATIONS EXCEPT THAT ALL POSTS SHALL WEIGH 3 LBS./FOOT MINIMUM.

3. POSTS FOR STREET NAME SIGNS. POSTS SHALL BE 9 FEET LONG, CONSTRUCTED FROM 2 5/8" O.D. GALVANIZED STEEL PIPE WEIGHING A MINIMUM OF 3.65 POUNDS PER FOOT. POSTS SHALL BE POSITIONED SO THAT THE BOTTOM BLADE IS 7 FEET ABOVE GRADE.

4. SIGN BLANKS FOR TRAFFIC CONTROL SIGNS. SIGN BLANKS SHALL BE FABRICATED FROM 0.080" ALUMINUM ALLOY 6063-T6 CONFORMING TO THE REQUIREMENTS OF SUBSECTION 1626 OF THE STANDARD SPECIFICATIONS.

5. SIGN BLADES FOR STREET NAME SIGNS. EXTRUDED ALUMINUM BLADES SHALL BE ALUMINUM ALLOY CONFORMING TO 6063-T6 OR 5052-H38 (ASTM SPECIFICATION B221, LATEST ISSUE). BLADES SHALL HAVE AN ALODINE OR PHOSPHATE ETCHED FINISH. BLADES SHALL HAVE SQUARE CORNERS AND NO HOLES.

   BLADES BEARING THE STREET NAMES SHALL BE FIRMLY ATTACHED TO THE MOUNTING BRACKETS USING ALLEN-TYPE SET SCREWS. THE BLADES SHALL BE ORIENTED PARALLEL TO THE STREET.

6. MOUNTING BRACKETS FOR STREET NAME SIGN. DIE-CAST ALUMINUM BRACKETS SHALL BE ALUMINUM ALLOY 360 HAVING A TENSILE STRENGTH OF 44,000 PSI. THE BRACKETS SHALL BE SMOOTHLY FINISHED FREE OF PITS, BURRS, AND FLAWS. EACH BRACKET SHALL BE TAPPED AND DRILLED FOR 5/16" ZINC-PLATED ALLEN-TYPE SET SCREWS HAVING SELF-LOCKING SAW-TOOTH ENDS.

7. FASTENERS. ALL STEEL FASTENERS FOR TRAFFIC CONTROL SIGNS SHALL BE GALVANIZED AND SHALL CONFORM TO THE REQUIREMENTS OF SUBSECTION 1614 OF THE STANDARD SPECIFICATIONS.

8. REFLECTIVE SHEETING. REFLECTIVE SHEETING SHALL BE TYPE II - HIGH PERFORMANCE CLASS HA IN ACCORDANCE WITH SUBSECTION 2201 OF THE STANDARD SPECIFICATIONS.

9. PROCESS INK. ALL PROCESS INK SHALL CONFORM TO THE REQUIREMENTS OF SUBSECTION 2202 OF THE STANDARD SPECIFICATIONS.

10. DETAILS. REGULATORY AND WARNING SIGNS SHALL CONFORM TO THE DETAILS IN "STANDARD HIGHWAY SIGNS", FHWA, 1979.

11. DETAILS - STREET NAME SIGNS. THE REFLECTIVE SHEETING FOR THE 6 3/4" STANDARD SIZE STREET NAME SIGN IS TO BE HIGHWAY GREEN REVERSE SCREENED BACKGROUND WITH SILVER-WHITE #2 COPY WITH 4" UPPER CASE AND 3" LOWER CASE PRIMARY COPY AND SUFFIX COPY, BOTH SERIES "C". WHERE SUFFIX LETTERS ARE USED ON NUMBERED STREETS AS RD, TH, ETC., THEY SHALL BE 1 1/2" LOWER CASE SERIES "C" LETTERS. FACES TO TRIM TO A 6 3/4" WIDTH. (SEE DETAIL A.)

    THE REFLECTIVE SHEETING FOR THE 9" METRO SIZE STREET NAME SIGN IS TO BE HIGHWAY GREEN REVERSE SCREENED BACKGROUND WITH SILVER-WHITE #2 COPY WITH 5" UPPER CASE AND 3 3/4" LOWER CASE PRIMARY COPY AND SUFFIX COPY, BOTH SERIES "C". WHERE SUFFIX LETTERS ARE USED ON NUMBERED STREETS, SUCH AS RD, TH, ETC., THEY SHALL BE 3" LOWER CASE SERIES "C" LETTERS. BLOCK NUMBERS SHALL CONSIST OF 3" SERIES "C". THE CARDINAL DIRECTION CENTERED DIRECTLY BELOW THE BLOCK NUMBER SHALL BE AN UPPER CASE, 3" SERIES "C" LETTER. FACES TO TRIM TO A 9" WIDTH. (SEE DETAIL B.)

    A 9" METRO BLADE SHOWING BLOCK NUMBERS AND CARDINAL DIRECTIONS WILL BE USED IN THE FOLLOWING SITUATIONS:
    1. ARTERIAL/ARTERIAL STREET INTERSECTION
    2. ARTERIAL/RESIDENTIAL STREET INTERSECTION
    3. ARTERIAL/COLLECTOR STREET INTERSECTION
    4. COLLECTOR/COLLECTOR STREET INTERSECTION
    5. COLLECTOR/RESIDENTIAL STREET INTERSECTION

    THE BLOCK NUMBER WILL REFLECT THE HUNDRED BLOCK THAT THE POST IS LOCATED IN AND THE CARDINAL DIRECTION WILL BE A LETTER "E", "W", "N", OR "S" CENTERED BELOW THE HUNDRED BLOCK.

    FOR CUL-DE-SAC STREETS, A 9" METRO SIZE BLADE SHALL BE USED WITH THE HOUSE NUMBERS DISPLAYED BENEATH THE STREET NAME. LETTERING TO BE THE SAME AS FOR THE 6 3/4" SIZE BLADE, EXCEPT THAT THE HOUSE NUMBER INFORMATION SHALL BE 3" SERIES "C".

    SHOP DRAWINGS OF LAYOUTS FOR STREET NAME SIGNS SHALL BE SUBMITTED TO THE TRAFFIC ENGINEERING DIVISION OF THE CITY OF WICHITA FOR APPROVAL PRIOR TO FABRICATION. THE FINISHED SIGNS AS SUPPLIED SHALL BE OF GOOD APPEARANCE, FREE FROM RAGGED EDGES, CRACKS, SCALES OR BLISTERS AND SHALL BE CLEAN-CUT. SIGNS SHALL BE PACKED IN SUCH MANNER AS TO PREVENT DAMAGE OR DEFACEMENT DURING SHIPMENT OR STORAGE.

12. TRAFFIC CONTROL AND STREET NAME SIGNS. TRAFFIC CONTROL AND STREET NAME SIGNS SHALL BE MEASURED AND PAID FOR AT THE UNIT PRICE PER LUMP SUM. THE PAYMENT AS SET FORTH ABOVE SHALL BE CONSIDERED FULL COMPENSATION FOR ALL EXCAVATION, BACKFILLING, POSTS, ANCHORS, FASTENERS, MATERIALS, LABOR, TOOLS AND INCIDENTALS NECESSARY TO COMPLETE THIS WORK.

FOREST LAKES
PHASE NO. 8

SIGNING DETAILS

PROFESSIONAL ENGINEERING CONSULTANTS, P.A.
ENGINEERS
WICHITA, KANSAS

Designed by	MWB, GDD	Checked by		
Drawn by	DEP	Date FEB., 1994	Job No	93695

PLAN | SURVEYED | NOTE BOOK | PLOTTED | NO. | ALIGNMENT CHECKED | RT. OF WAY CHECKED | DATE | BY

DRAWING NAME: 32-93695 SIGN DTLS
LOCATION: FP 41126
CENTER COORDINATES:
ROTATION ANGLE:
DATE LAST WORKED ON:
ON-LINE CLUNN