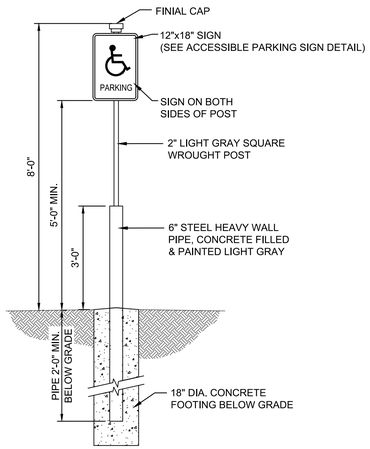

1 ACCESSIBLE SIGN MOUNTING

SCALE: NTS

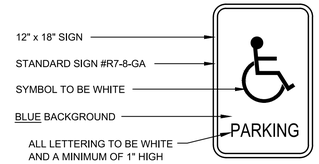

NOTES:
1. ALL SIGNS TO BE 0.080" THICK ALUMINUM
2. ALL SIGNS SHALL CONFORM WITH ALL CURRENT A.D.A., FEDERAL, STATE AND LOCAL CODES AND REGULATIONS.
3. ONE AT EACH HANDICAP SPACE

2 ACCESSIBLE PARKING SIGN

SCALE: NTS

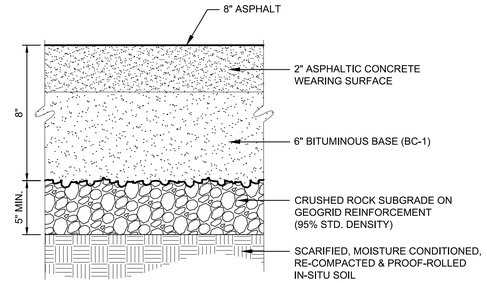

3 TYP. SECTION: 8.0" ASPHALT PVMT.

SCALE: NTS

NOTE:
1. GEOGRID SHALL BE TENSAR BX 4100 OR APPROVED EQUAL

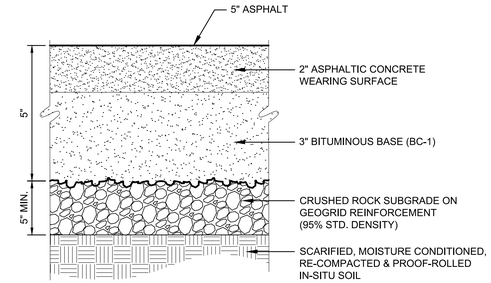

4 TYP. SECTION: 5.0" ASPHALT PVMT.

SCALE: NTS

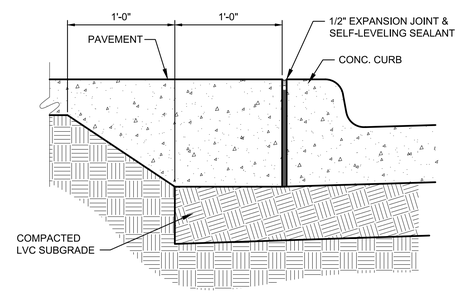

5 CONC. SIDEWALK @ CURB

SCALE: NTS

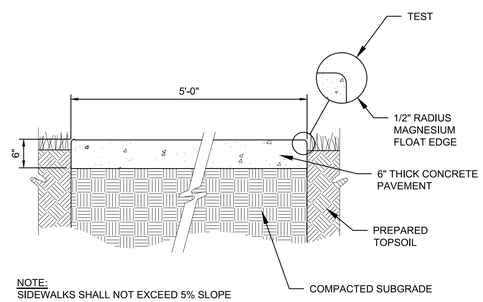

NOTE:
SIDEWALKS SHALL NOT EXCEED 5% SLOPE OR EXCEED A 2% CROSS SLOPE.

6 6" CONCRETE SIDEWALK

SCALE: NTS

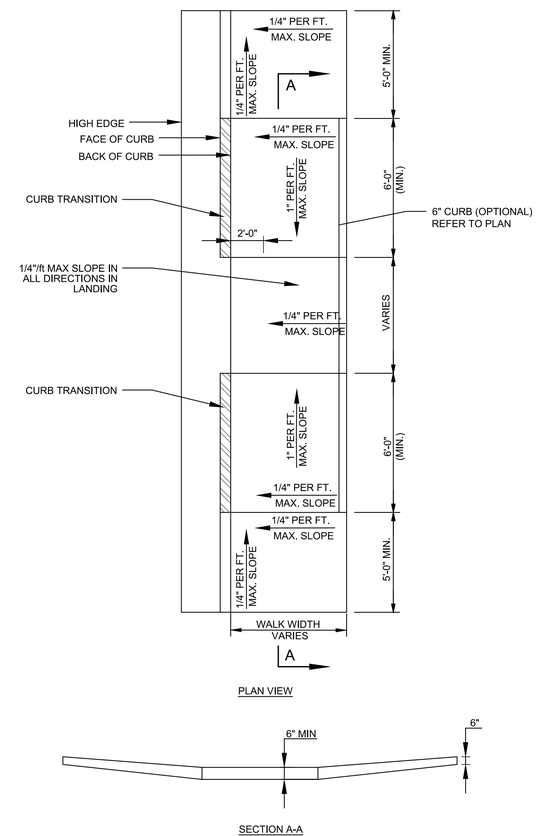

9 WHEEL CHAIR RAMP 2

SCALE: NTS

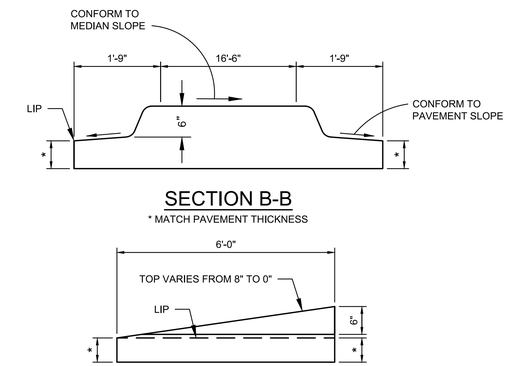

SECTION B-B

* MATCH PAVEMENT THICKNESS

SECTION A-A

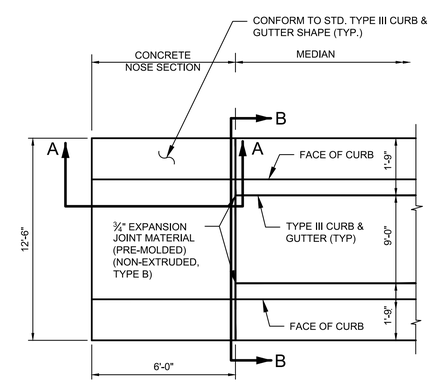

PLAN

10 CONCRETE MEDIAN NOSE

SCALE: NTS

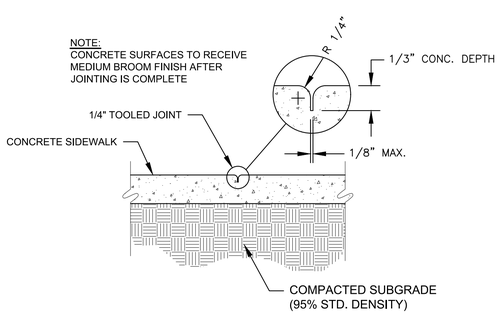

7 TOOLED JOINT DETAIL

SCALE: NTS

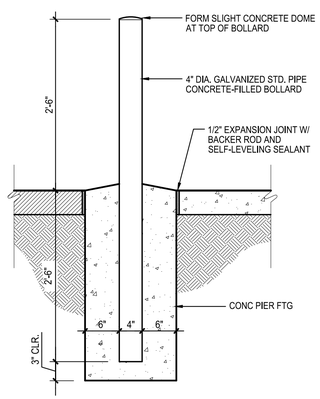

8 STEEL BOLLARD

SCALE: NTS

MKEC
Wichita, KS • 316-684-9600

PAVING & DRAINAGE FOR

BOTANICA GARDENS PARKING LOT

WICHITA, KANSAS

©2021
MKEC Engineering
All Rights Reserved
www.mkec.com
These drawings and their contents, including, but not limited to, all concepts, designs, & ideas are the exclusive property of MKEC Engineering (MKEC), and may not be used or reproduced in any way without the express consent of MKEC.

MISC. DETAILS

PROJECT NO.	482-11034
DATE	JULY 2021
SCALE	NTS

DESIGNED	DRAWN	CHECKED
JAG	CRM	GJA

NO.	REVISION	DATE

SHEET NO.
03 OF 31

PLOTTED: Thursday, July 15, 2021 @ 11:22AM
J:\PROJECTS\2019\19\19\19483_COW_BOTANICA PARKING EXPANSION_19483 CAD\SHTS\05 CIVIL\PAV\19483-05-4000.DWG