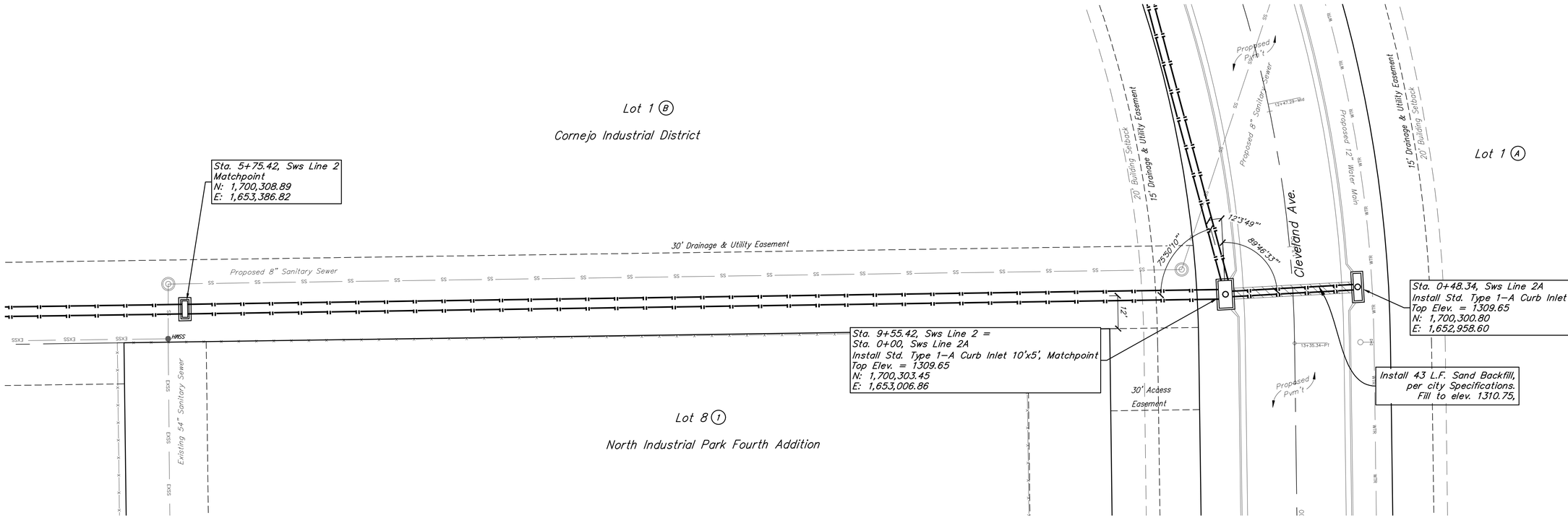

BENCHMARKS

BM- #1:
Square cut on top of South curb of 21st St. N. 334'± West and 32'± South of the intersection of 21st St. N. and Cleveland Ave.
Elev. = 1307.56(NAVD88)

BM- #2:
Square cut on top of South concrete pad of monitoring well 26'± East and 51'± South of the intersection of 21st St. N. and Cleveland Ave.
Elev. = 1308.70(NAVD88)

BM- #3:
C.O.W BM Disc on top of South concrete wall 918'± West and 147'± North of the intersection of 21st. St. N. and Cleveland Ave.
Elev. = 1312.58(NAVD88)

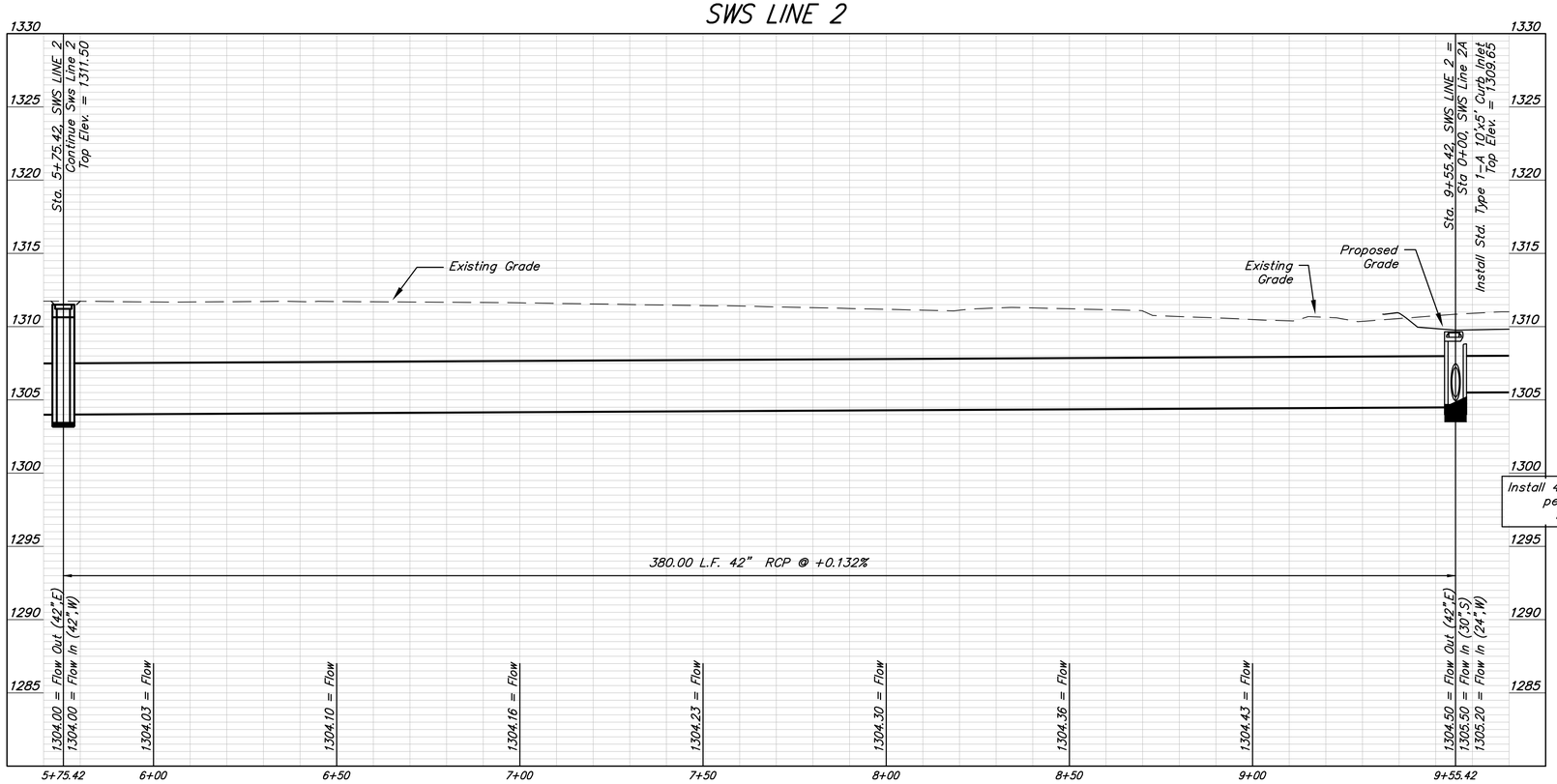

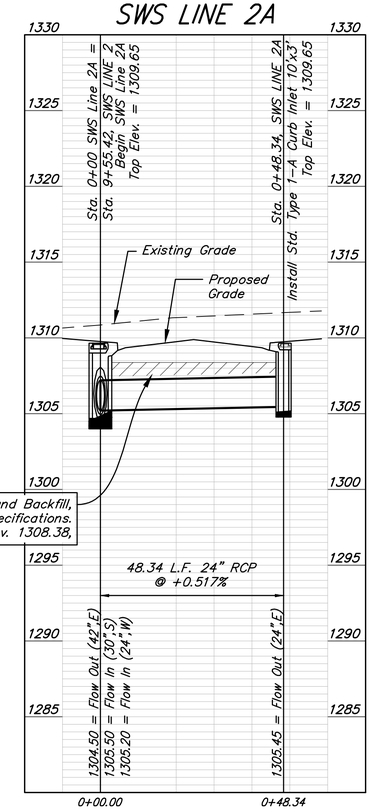

PATRICK SHAWN BAUGHMAN
CENSED
16976
10/26/2021
KANSAS
PROFESSIONAL ENGINEER

BAUGHMAN COMPANY
315 Ellis St.
Wichita, KS 67211
316-262-7271
BaughmanCo.com

CORNEJO INDUSTRIAL DISTRICT
SWS LINE 2
Sta. 5+75
to
Sta. 9+55
SWS LINE 2A
STREET IMPROVEMENTS
Pavement Improvements

PROJECT NUMBER:
472-2021-085726

DESIGN: PSB DRAWN: TNJ
DATE: Oct. 26, 2021

SHEET 23 OF 62

File: E:\Projects\Cornejo Industrial District_20-11-P603\Engineering\Phase 1 (only if Multiple Phases)\SWD_21-06-E936\CID SWD Petition.dwg