FHWA REG NO	STATE	PROJECT NO.	YEAR	SHEET NO.	TOTAL SHEETS
7	KANSAS	472-83084	2000	16	58

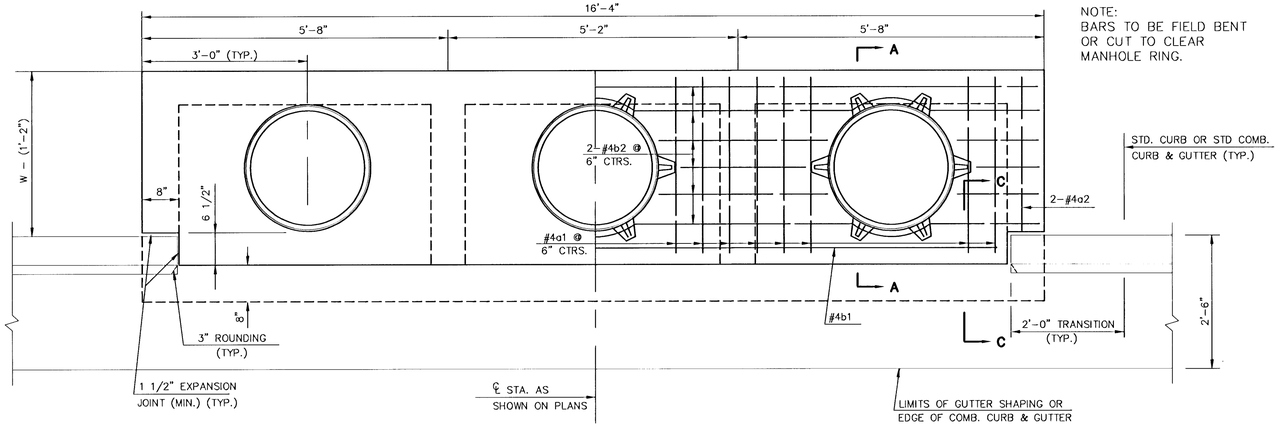

NOTE:
BARS TO BE FIELD BENT OR CUT TO CLEAR MANHOLE RING.

SLAB REINFORCING NOT SHOWN

SHOWING SLAB REINFORCING

PLAN

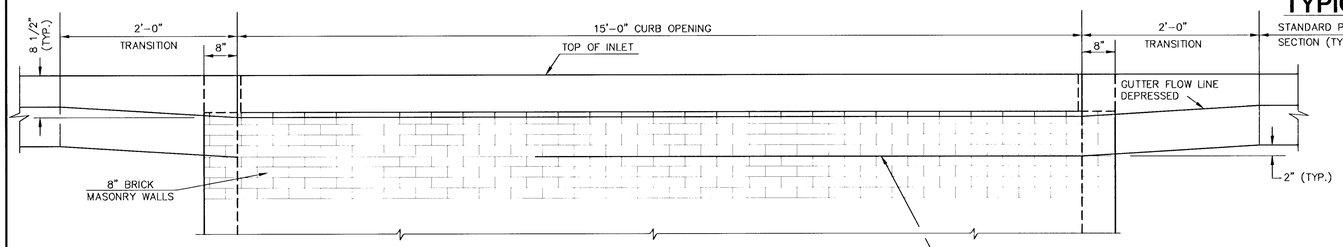

ELEVATION

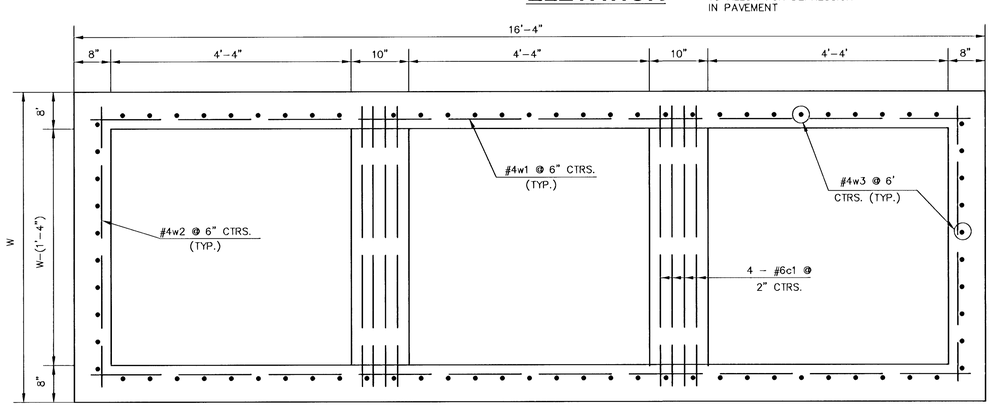

SECTION B-B

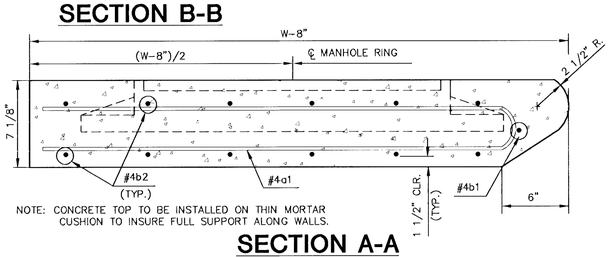

NOTE: CONCRETE TOP TO BE INSTALLED ON THIN MORTAR CUSHION TO INSURE FULL SUPPORT ALONG WALLS.

SECTION A-A

STANDARD CURB INLET PRECAST TOPS			
W	PRE-CAST TOP SIZE	PIPE SIZE	CU. YD. CONC.
4'-4"	3'-8"x16'-4"x7 1/2"	21" & SMALLER	± 1.20
5'-4"	4'-8"x16'-4"x7 1/2"	24" & 30"	± 1.58
6'-4'	5'-8"x16'-4"x7 1/2"	36" & 42"	± 1.95
7'-4"	6'-8"x16'-4"x7 1/2"	48" & 54"	± 2.33
8'-4"	7'-8"x16'-4"x7 1/2"	60" & 66"	± 2.70

GENERAL NOTES

1. CONCRETE SHALL BE C.O.W. STANDARD PAVING MIX. ALL EXPOSED EDGES SHALL BE FINISHED WITH AN EDGING TOOL. REINFORCING BARS SHALL BE FIELD BENT OR CUT TO CLEAR PIPES. ALL BARS ARE #4 BARS AT 6" SPACING AND SHALL HAVE A MINIMUM CLEARANCE OF 1 1/2" UNLESS OTHERWISE NOTED. FLOORS OF INLET SHALL BE SHAPED WITH 8 SACK SAND MIX CONCRETE TO INCREASE HYDRAULIC EFFICIENCY SUCH THAT THE INLET WILL BE SELF CLEANING BETWEEN ALL INLET AND/OR OUTFALL PIPE(S). THE CONTRACTOR WILL BE REQUIRED TO CONSTRUCT 8" BRICK MASONRY WALLS BETWEEN THE CONCRETE INLET BASE AND TOP ON THIS INLET WHEN H=7'-0" OR LESS AND W=6'-4" OR LESS.

2. THE ENDS OF ALL PIPES INSTALLED IN INLETS SHALL BE CUT OFF FLUSH WITH THE INSIDE FACE OF THE INLET WALL.

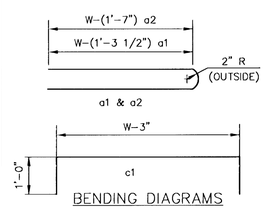

BENDING DIAGRAMS

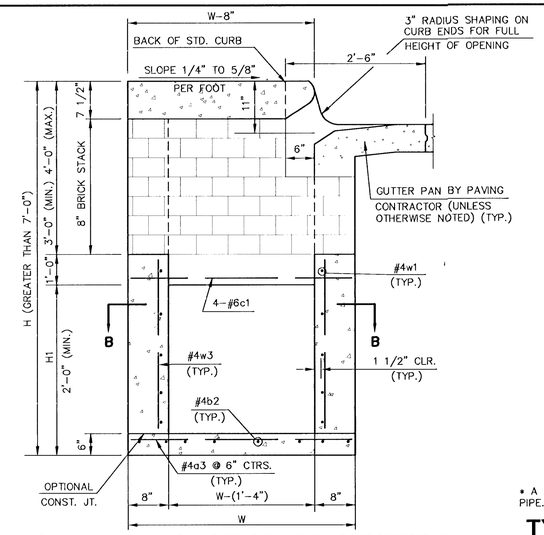

TYPICAL INLET SECTION AT CENTER WALL

(REINFORCED CONCRETE WALLS)

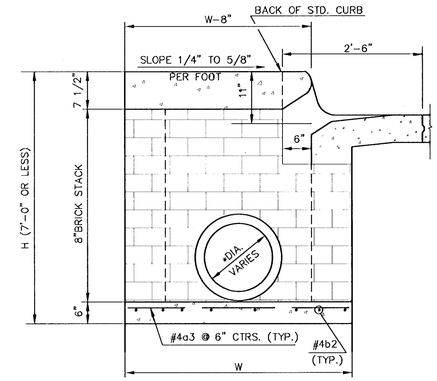

* A CENTER WALL OPENING SHALL BE PROVIDED BY MEANS OF A SECTION OF REINFORCED CONCRETE PIPE. THE MINIMUM DIAMETER USED SHALL BE THAT OF THE OUTLET PIPE.

TYPICAL INLET SECTION AT CENTER WALL

(MASONRY WALLS)

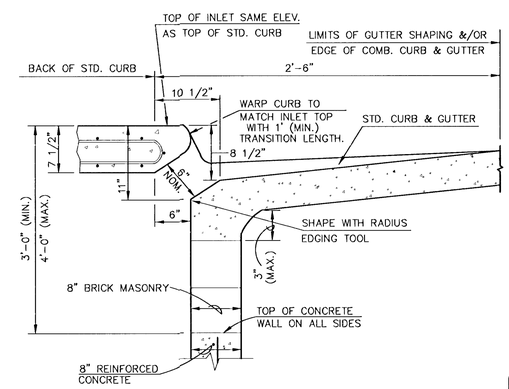

SECTION C-C

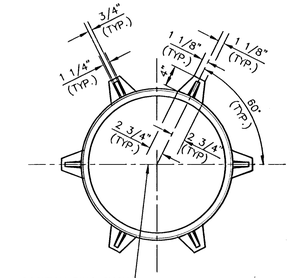

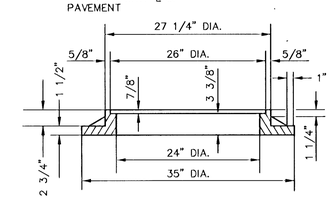

INLET FRAME

WT.=180 LBS.

SEE CITY OF WICHITA STANDARD MANHOLE FRAME AND COVER DETAIL SHEET FOR COVER DETAILS TO BE USED WITH INLET FRAME.

SLAB AND FLOOR REINFORCING

		W=4'-4'		W=5'-4"		W=6'-4"		W=7'-4"		W=8'-4"	
MARK	SIZE	NO.	LENGTH	NO.	LENGTH	NO.	LENGTH	NO.	LENGTH	NO.	LENGTH
a1	#4	20	6' 7 1/4"	20	8' 7 1/4"	20	10' 7 1/4"	20	12' 7 1/4"	20	14' 7 1/4"
a2	#4	4	6'-0"	4	8'-0"	4	10'-0"	4	12'-0"	4	14'-0"
a3	#4	33	4'-1"	33	5'-1"	33	6'-1"	33	7'-1"	33	8'-1"
b1	#4	1	14'-8"	1	14'-8"	1	14'-8"	1	14'-8"	1	14'-8"
**b2	#4	18	16'-1"	24	16'-1"	30	16'-1"	36	16'-1"	42	16'-1"

WALL REINFORCING

		W=4'-4'		W=5'-4'		W=6'-4'		W=7'-4"		W=8'-4"	
MARK	SIZE	NO.	LENGTH	NO.	LENGTH	NO.	LENGTH	NO.	LENGTH	NO.	LENGTH
c1	#6	8	6'-1"	8	7'-1"	8	8'-1"	8	9'-1"	8	10'-1"
w1	#4	①	4 900	①	4 900	①	4 900	①	4 900	①	4 900
w2	#4	①	1 245	①	1 550	①	1 855	①	2 160	①	2 465
w3	#4	②	③	②	③	②	③	②	③	②	③

** FIELD BEND OR CUT REINFORCING AS REQUIRED FOR CLEARANCE

① 4(H1-6")

② 60 + 4(W-1)

③ H1-(9")

REVISED: 12-21-1984

STANDARD TYPE 1 CURB INLET

INLET OPENING=6" x 15'-0"

OCTOBER, 1984

CITY OF WICHITA, KANSAS

Design BER KJS MWB	Checked by	Checked by	
Drawn by	Date	Date	Job No.

A:\CIVIL\SENECA\94005-2\STD\GX15-1.DWG Mon May 01 15:51:27 2000