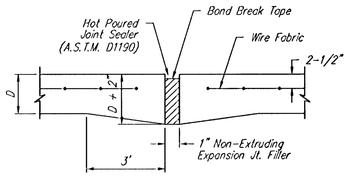

EXPANSION JOINT

NOTE: Extra Thickness to be Subsidiary to Price of Square Yards Pavement

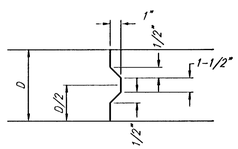

KEYWAY DETAIL

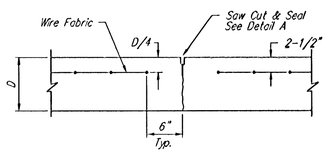

CONTRACTION JOINT DETAIL (C.J.)

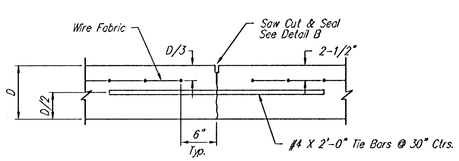

LONGITUDINAL JOINT DETAIL (L.J.)

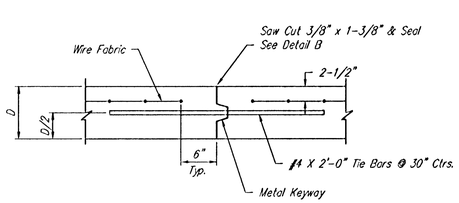

OPTIONAL LONGITUDINAL JOINT DETAIL (L.J.)
(CONSTRUCTION JOINT)

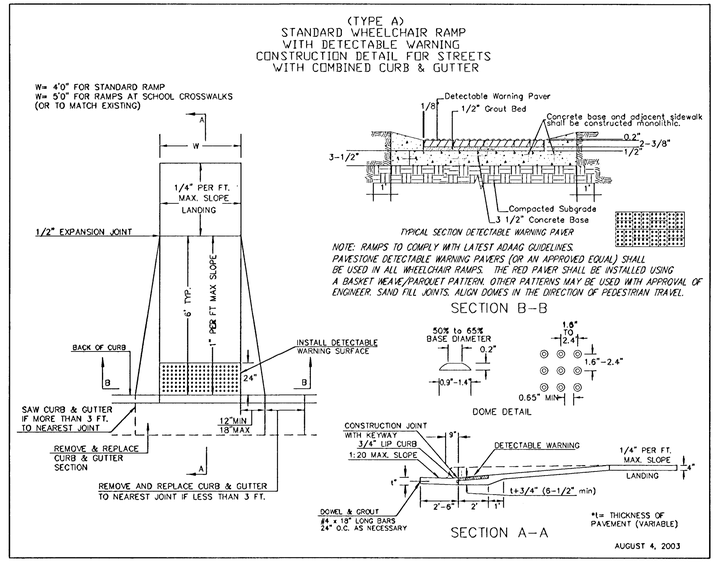

WHEELCHAIR RAMP DETAIL

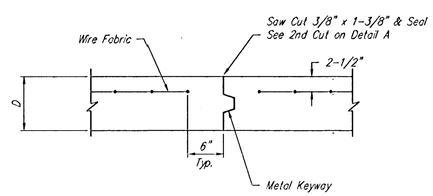

OPTIONAL CONTRACTION JOINT
(CONSTRUCTION JOINT)

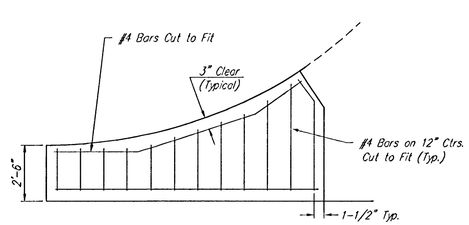

WING REINFORCING DETAIL

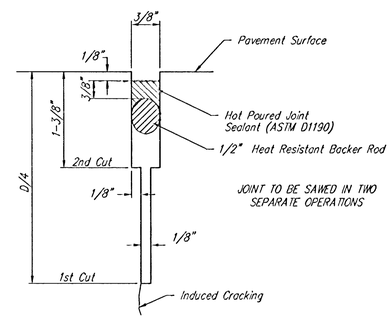

SAW JOINT DETAIL "A"

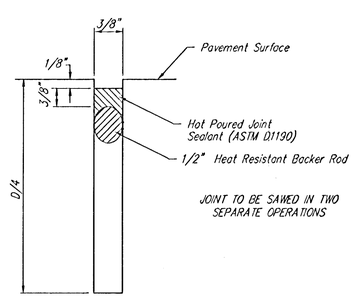

SAW JOINT DETAIL "B"

Scale: 1" = 20'

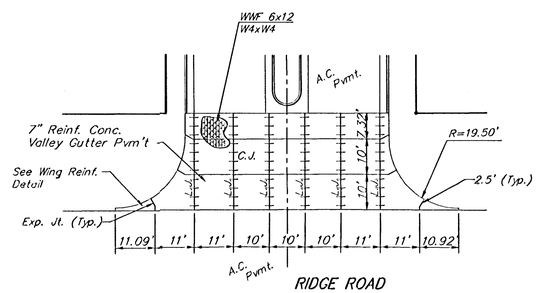

RIDGE ROAD

NOTE: 6" X 12" W4XW4 Wire Fabric Reinforcing Shall Be Placed So That The Wires With The 6" Spacing Will Run Parallel With The Longitudinal Joints.

Baughman

NORTHWEST MEDICAL OFFICE
VALLEY GUTTER DETAILS
STREET IMPROVEMENTS

Baughman Company, P.A. 315 Ellis St. Wichita, KS 67211 P 316.262.7271 F 316.262.0149
ENGINEERING | SURVEYING | PLANNING | LANDSCAPE ARCHITECTURE

PROJECT NUMBER	DESIGN STAFF / DRAWN STAFF/JEB
REVISIONS:	APPROVED / DATE 11/06
	SCALE Noted
	SHEET 5 OF 17

E:\Northwest Medical Office\vgdetail.dwg 06-07-E602