NOTE:
See Corral Detail Sheet for additional reinforcing in slab.

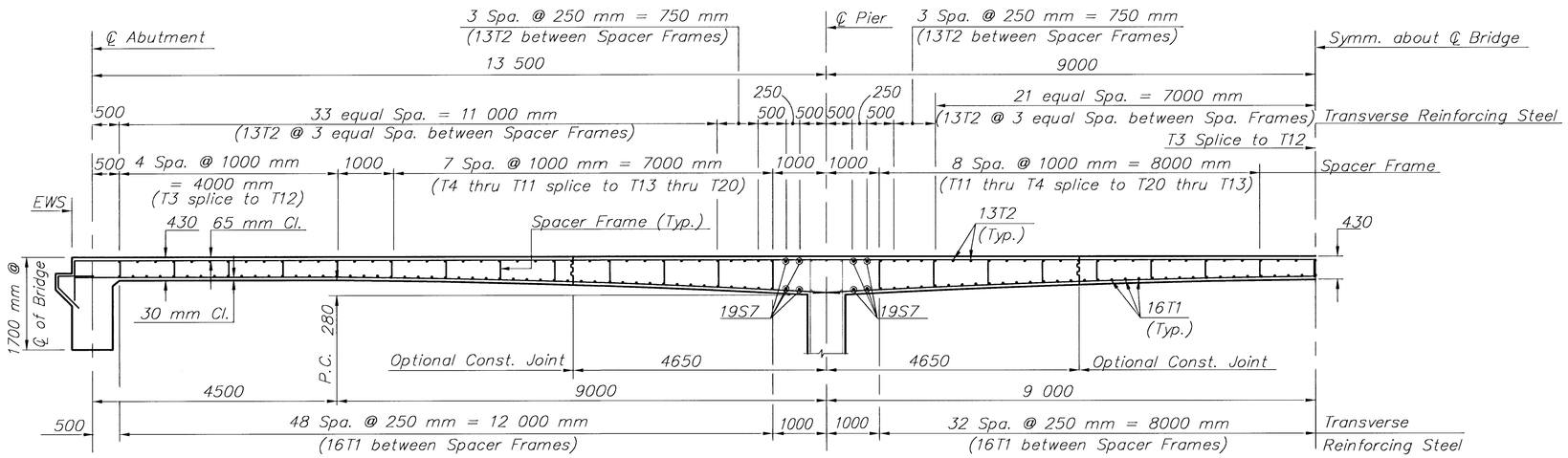

HALF LONGITUDINAL SECTION ALONG ℄ BRIDGE

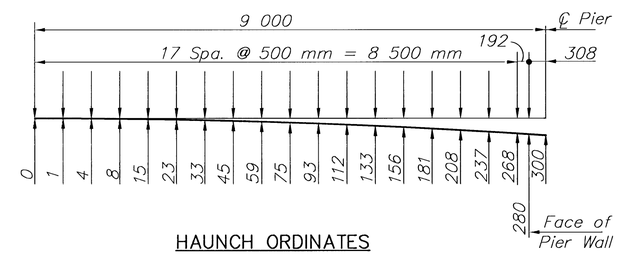

HAUNCH ORDINATES

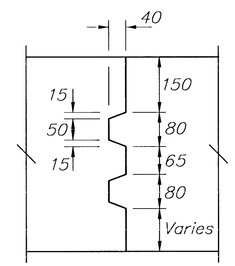

TRANSVERSE SLAB
CONSTRUCTION JOINT
(Optional)

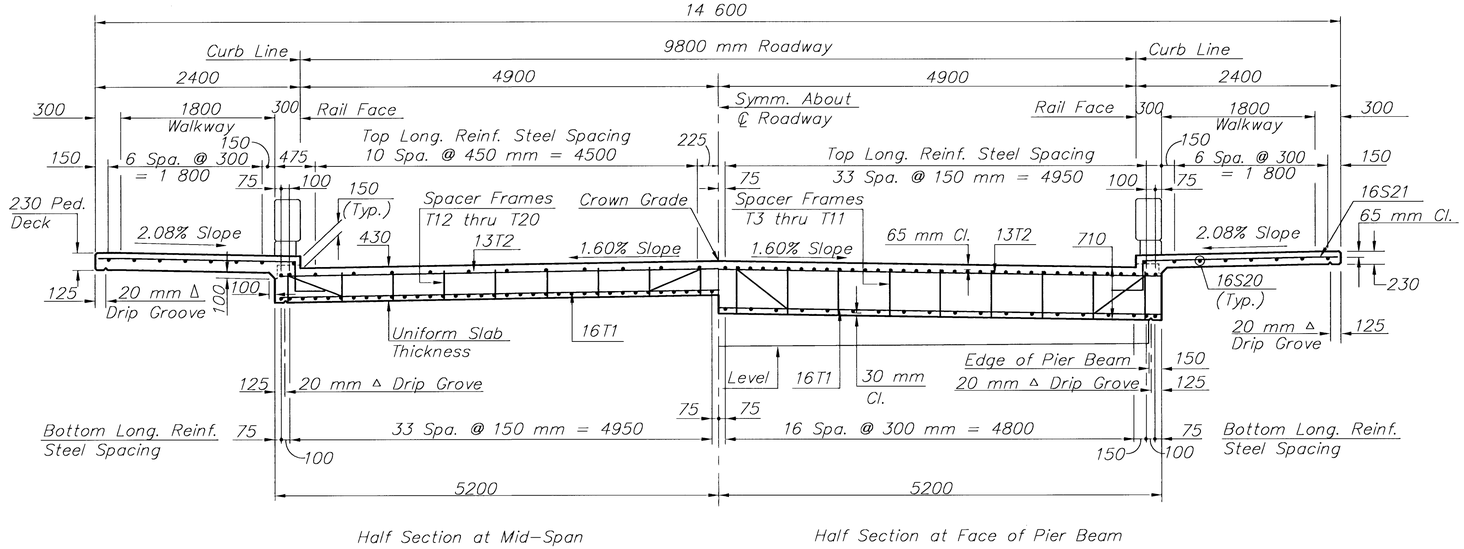

Half Section at Mid-Span

Half Section at Face of Pier Beam

HALF SECTION OF SLAB
(Shown perpendicular to ℄ Project)

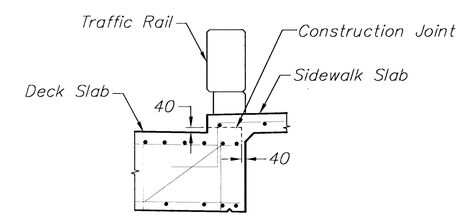

CONSTRUCTION JOINT DETAIL

MID-KANSAS ENGINEERING CONSULTANTS, INC.
411 N. WEBB ROAD
WICHITA, KS. 67206
316-684-9600

MURDOCK AVENUE BRIDGE
PROJECT NAME

SUPERSTRUCTURE DETAILS - SECTION
SHEET TITLE

KJS	DPG	PAF
DESIGN BY:	DRAWN BY:	CHECKED BY:
FEB. 1999	97042	18 / 39
DATE	JOB NO.	SHEET/OF

K:\CIVIL\97042\DETAILS\97425SEC.DWG Wed Mar 24 13:18:32 1999 BY MLW