| FEDERAL AID PROJECT NO. | STATE | PROJECT NO. | SHEET NO. | TOTAL SHEETS |
|---|---|---|---|---|
| 1 | KANSAS | 00Z-75-8418(88)0000000 | 9 | 16 |

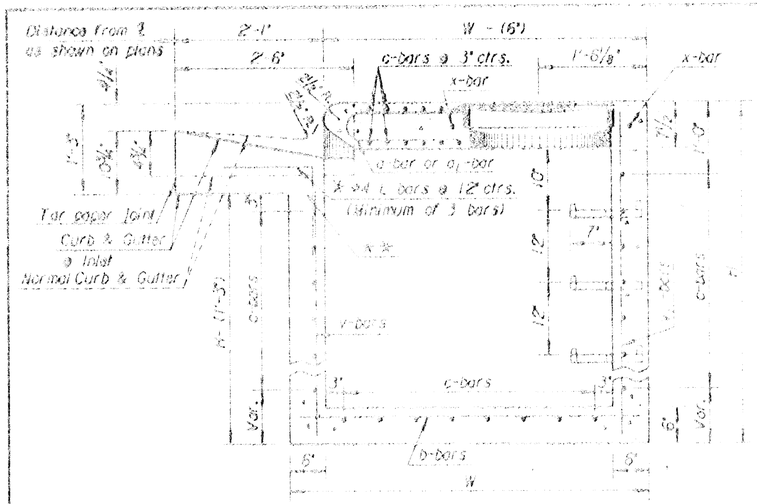


SECTION A-A

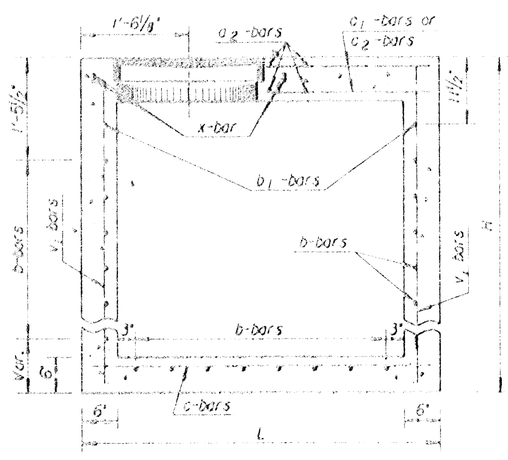


SECTION B-B

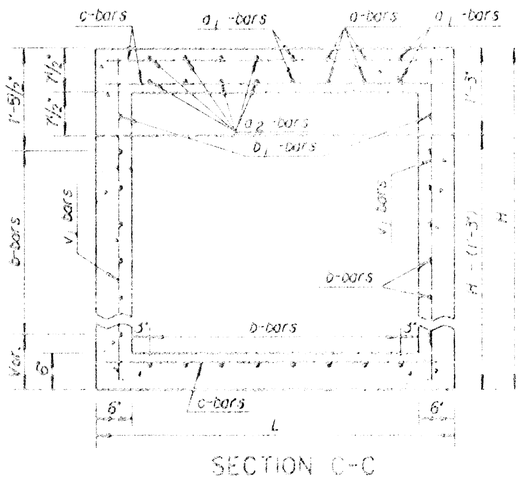


SECTION C-C

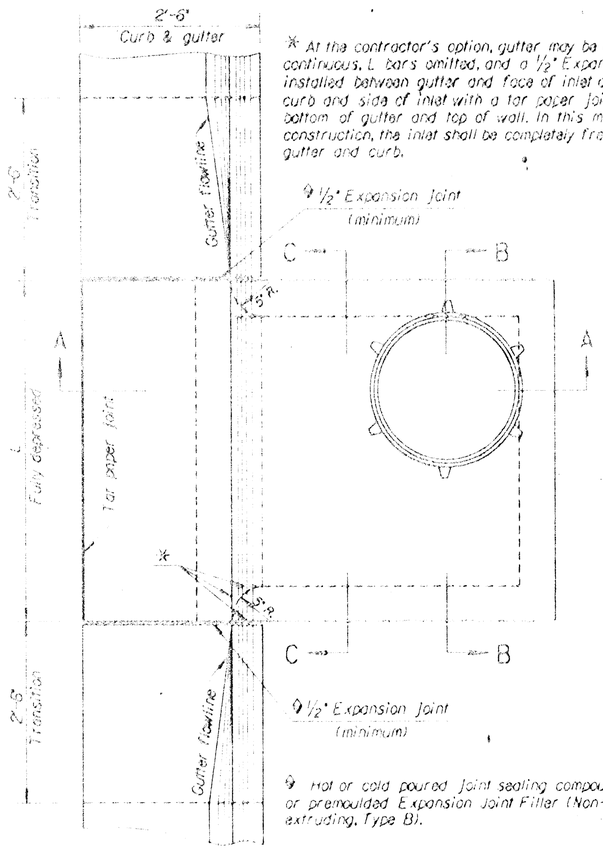


PLAN

* At the contractor's option, gutter may be constructed continuous. L bars omitted, and a 1/2" Expansion joint installed between gutter and face of inlet and between curb and side of inlet with a tar paper joint between bottom of gutter and top of wall. In this method of construction, the inlet shall be completely free of the gutter and curb.

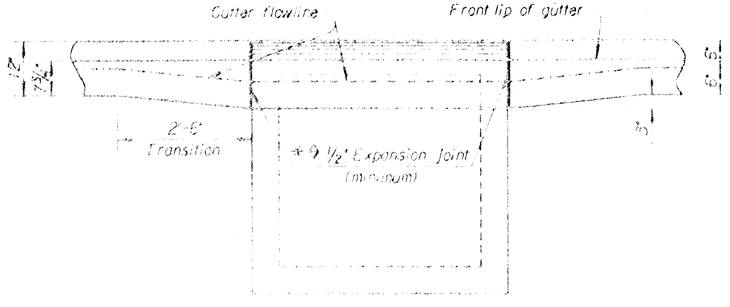


ELEVATION

Note: Transition gutter from normal depth of 6" to 9" at inlet in 2'-6". Curb and Gutter sections shall be shaped as shown where required by the installation of curb inlets. This work will be subsidiary to other bid items.

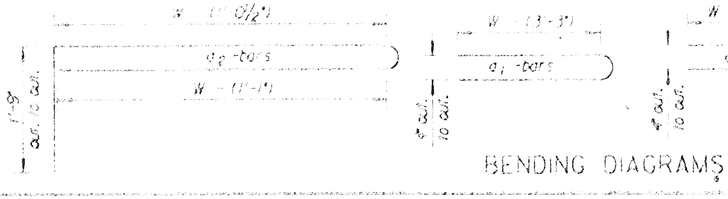


BENDING DIAGRAMS

Note: Usa Class A Concrete throughout. All exposed edges shall be finished with an edging tool.

At the contractors option Class A Concrete (AE) or mix used in concrete pavement may be used throughout.

In general, pipes will enter and leave manhole at various positions. Where possible bend bars around pipes.

Floor of manhole to be shaped ~~as shown in various "EXAMPLES"~~ with unreinforced Class "A" Concrete.

Manhole opening and steps, where used, shall be placed to afford easy access to top of shaped invert. Top reinforcing bars to be adjusted accordingly.

All castings shall be gray iron and shall comply with the KDOT Standard Specifications.

No deductions in concrete quantities shall be made for pipe openings or additions to concrete quantities shall be made for shaping floor of manholes.

When so ordered by the Engineer, the top of the manhole shall be sloped slightly to approximately fit the ground line or other conditions.

Dimensions and weights of cast iron as shown on this sheet are minimum. Larger dimensions and/or heavier weights of cast iron may be used.

Steps shall be installed in all storm sewer inlets when specified in the plans or when "H" is equal to or greater than six feet. Steps shall comply with the KDOT Standard Specification.

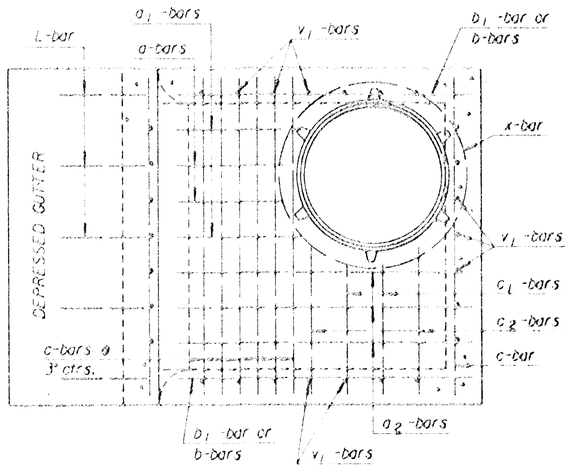


Reinforcing Steel Top View

STEP DETAILS

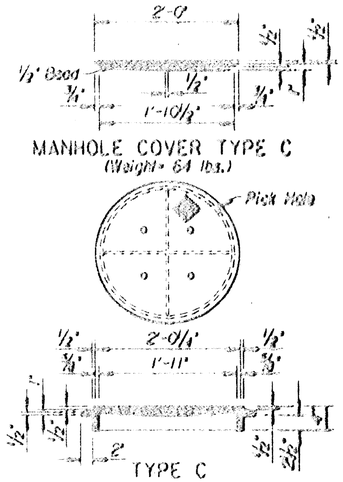


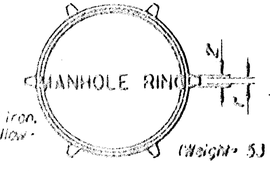


NOTE: All manhole castings are cast iron. Weight of castings includes no allowance for fillets and overruns.

* LIGHT TYPE MANHOLE COVER & RING

*Rings with four equally spaced lugs will be permitted.

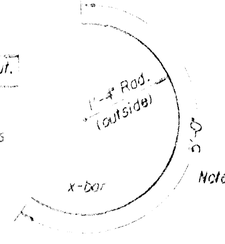


Note: Reinforcing steel for L bars is not included in the steel quantity and is subsidiary to the other inlet items.

| No. | DATE | REVISIONS | BY | CHKD |
|---|---|---|---|---|
| 2 | 2-21-13 | [illegible] | [illegible] | [illegible] |
| 1 | 1-30-12 | [illegible] | [illegible] | [illegible] |

KANSAS DEPARTMENT OF TRANSPORTATION

# TYPE 22 CURB INLET

~~STD. NO. 545~~

DATE APPROVED: [illegible] | CHIEF ENGINEER: [illegible] | DIRECTOR OF PROJECT DEVELOPMENT: [illegible]

Source File:
Drawn: [illegible]
Ckd: [illegible]
Plotted: 1:10 FEB 1994 1:24 Vbar