SCALE PLAN 1" = 20'
PROFILE 1" = 20' HORZ.
1" = 5' VERT.

BM. CITY STD. DISC AT ARMOUR AND 9TH ST. N.
24.0 FT. EAST AND 34.0 FT. SOUTH CENTER
LINES OF BOTH
ELEV. = 176.49

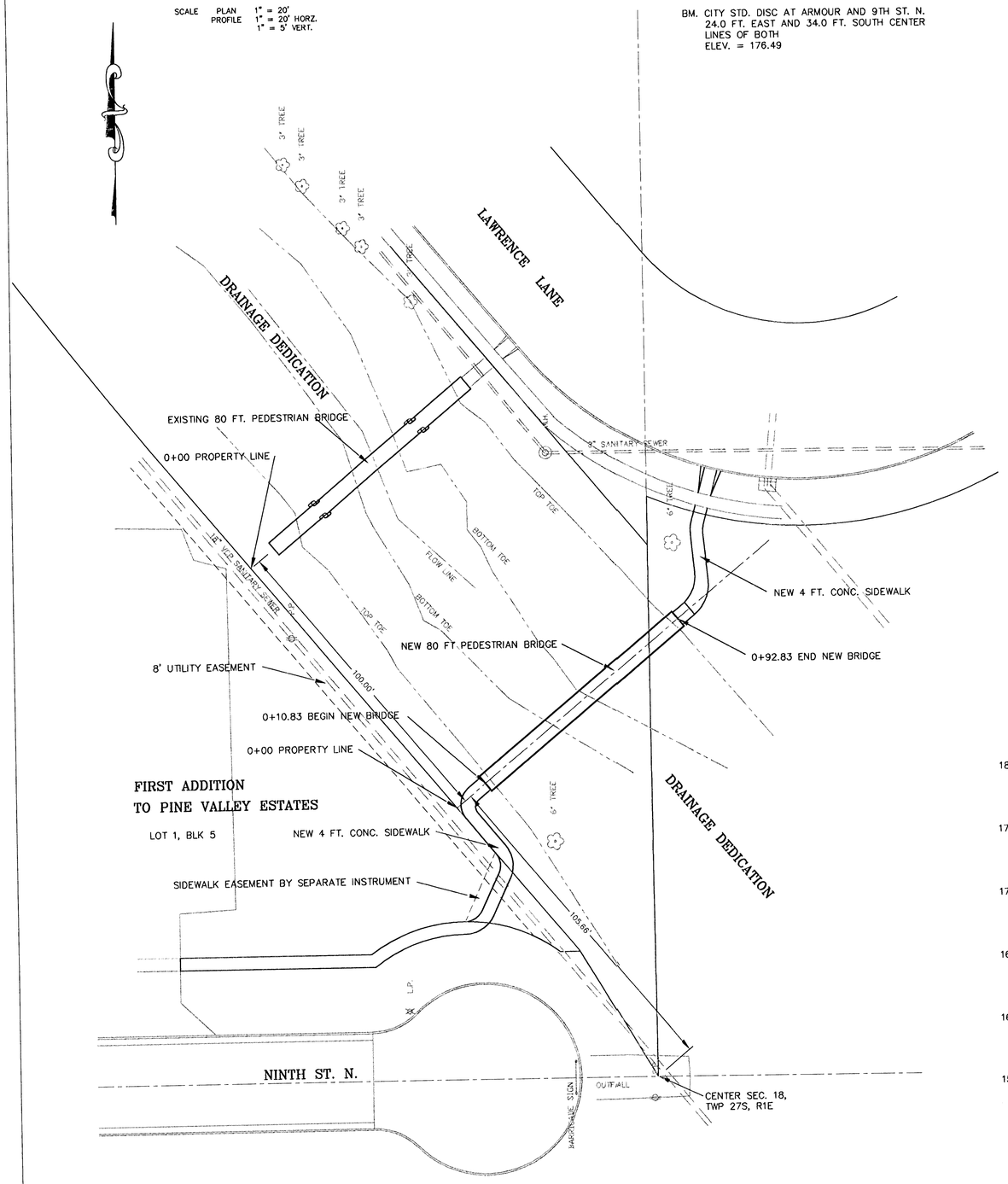

CONCRETE ABUTMENT PLAN

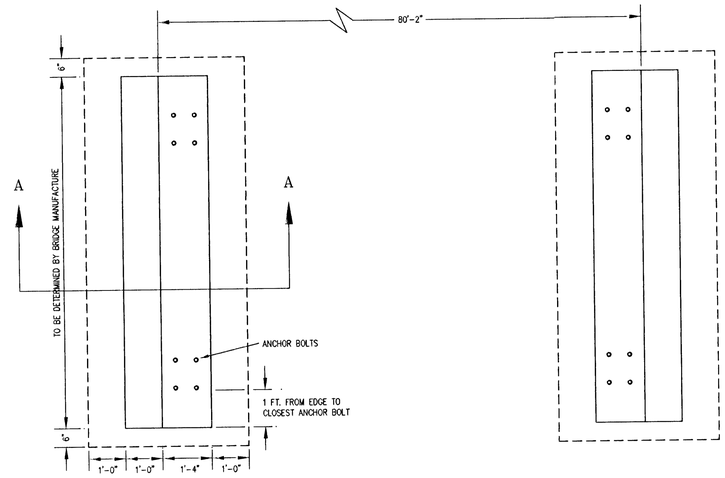

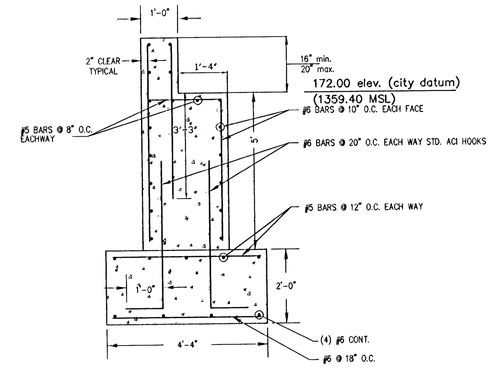

SECTION A–A

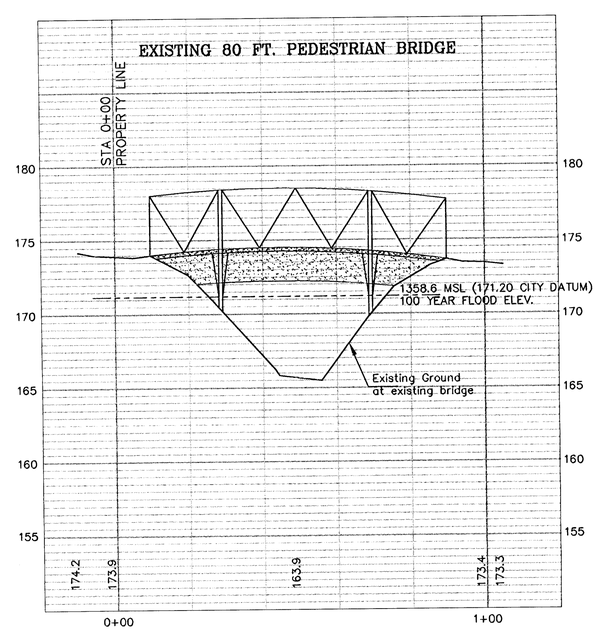

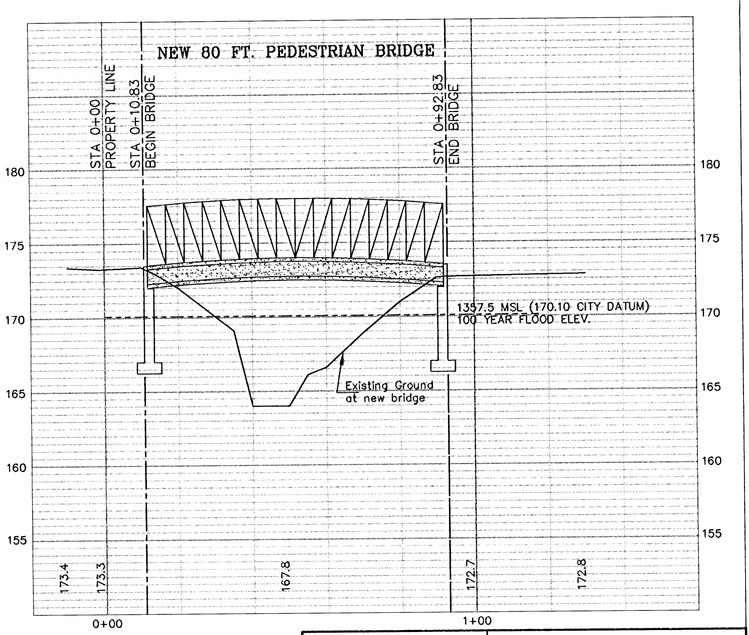

THE CITY OF WICHITA

CITY ENGINEER'S OFFICE
CITY HALL – SEVENTH FLOOR
455 NORTH MAIN STREET
WICHITA, KANSAS 67202
(316) 268-4501
(316) 268-4114 FAX

80 ft. PEDESTRIAN BRIDGE AT NINTH ST. N. AND LAWRENCE LANE

M. E. LINDEBAK P.E. – CITY ENGINEER

ENGINEER: S. BREITENBACH	DRAWN BY: R. LOOMIS
PROJECT NUMBER 472-83345	O.C.A. NO. 131532
DATE APRIL 2001	SHEET 2 OF 2

18-10-04-15