WATER VALVE BOX ELEVATIONS			
STREET	STATION	OFFSET	PROPOSED ELEVATION
PARKDALE COURT	25+92.99 (Extd.)	39.7' Rt.	178.7
PARKDALE COURT	26+43.04	22.0' Lt.	175.3

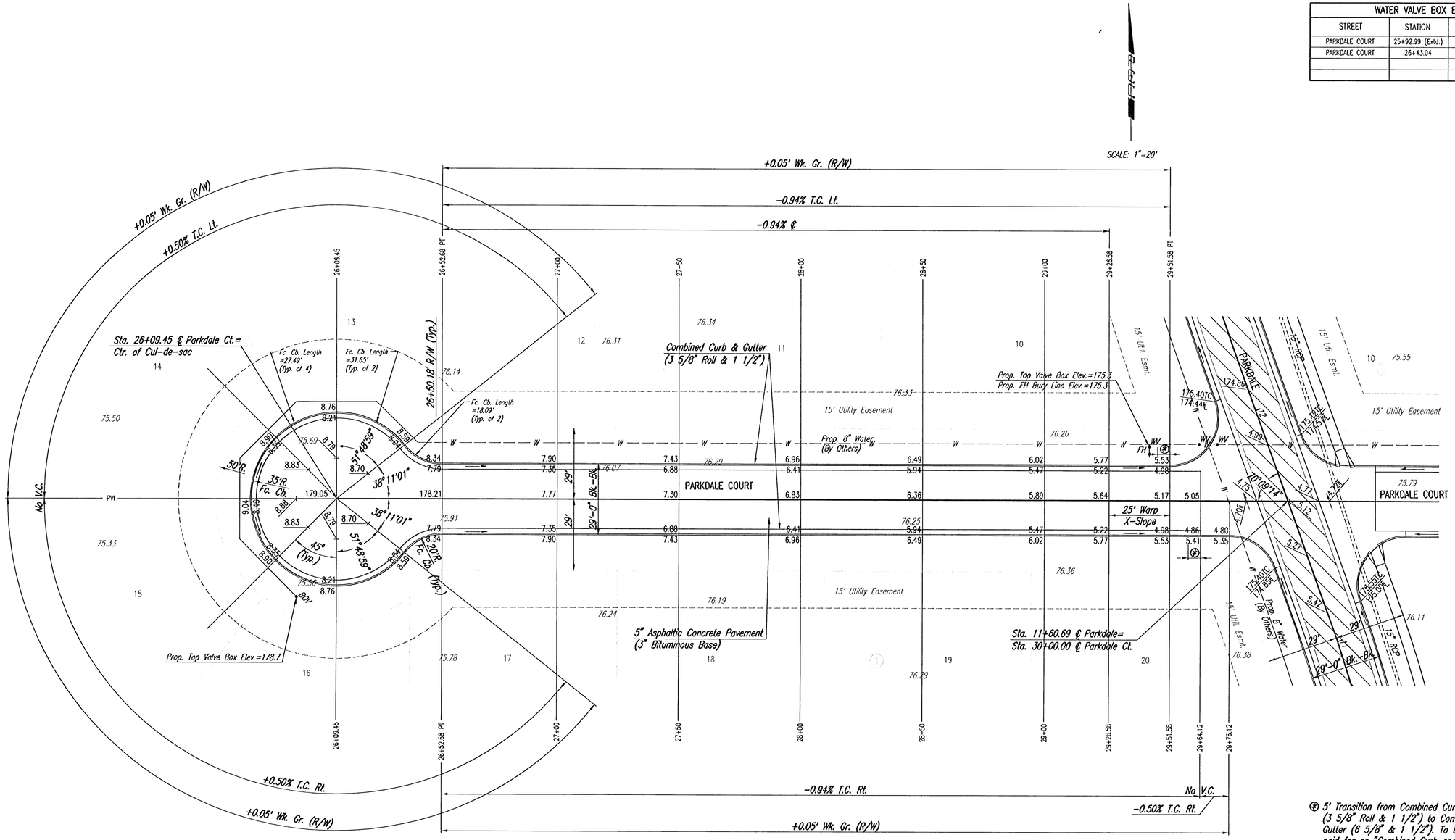

④ 5' Transition from Combined Curb and Gutter (3 5/8" Roll & 1 1/2") to Combined Curb and Gutter (6 5/8" & 1 1/2"). To be bid and paid for as "Combined Curb and Gutter (3 5/8" Roll & 1 1/2")".

NOTE: THIS STREET TO BE CONSTRUCTED WITH ROLL-TYPE CURB. TOP OF CURB ELEVATIONS GIVEN ARE FOR FULL HEIGHT CURB.

BRIAN D. BOUTWELL LICENSED 10889 PROFESSIONAL ENGINEER
11/28/05

No.	Revision	By	Date

EVERGREEN 5TH

PARKDALE COURT

STA. 26+09.45 TO STA. 30+00

JAMES L. ARMOUR, P.E.-CITY ENGINEER
CITY OF WICHITA PROJECT NO. 472-84103

Professional Engineering Consultants, P.A.
303 S. TOPEKA • WICHITA, KANSAS 67202
316-262-2691 • FAX 316-262-3003

Designed by	BDB, BMM	Job No.	35-05415-000
Drawn by	BJS, BMM	Date	July 2005

Sheet 9 of 45

DSNR: BLB OPER: BJS SCALE: 1=20.00
Q:\2005\05415\000\05415-000-C-STR26-30 11-28-2005 09:39:38 am