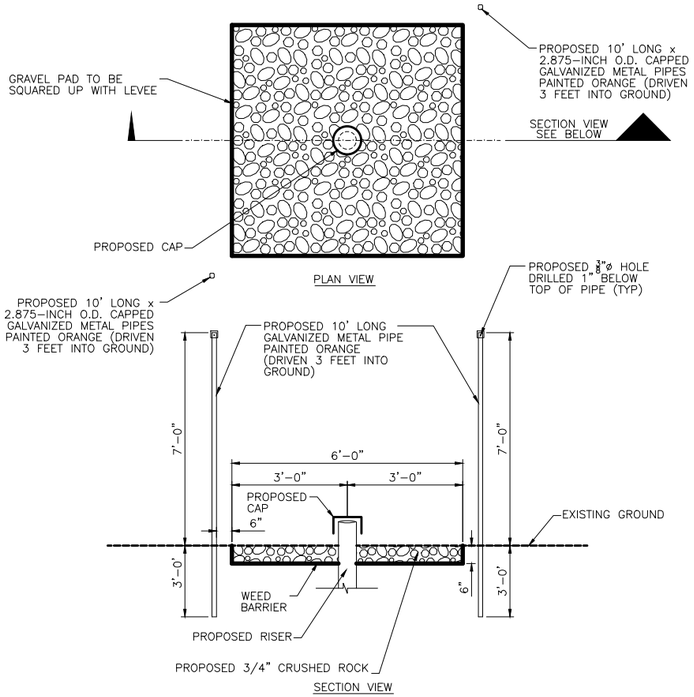

NOTES:

1) GALVANIZED METAL PIPES SHALL BE 2.875" O.D., 0.203-INCH THICK AND 5.97 lbs./lin. ft. WITH A 0.375" (3/8") DIAMETER HOLE DRILLED (1") DOWN FROM THE TOP OF THE GALVANIZED METAL PIPE.

2) PIPES SHALL BE PAINTED IN ACCORDANCE WITH ASTM D 6386. REFER TO THE AMERICAN GALVANIZERS ASSOCIATION'S "GUIDE TO PREPARING HOT-DIP GALVANIZED STEEL FOR PAINT" (http://www.galvanizeit.org/images/uploads/publicationPDFs/Paint_Guide_Galvanized_Steel.pdf

DETAIL "A" – TOE DRAIN MARKERS AND SURFACE TREATMENT
N.T.S.

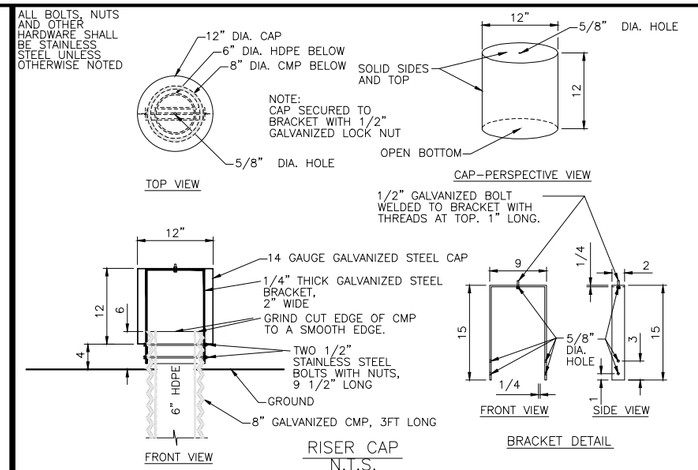

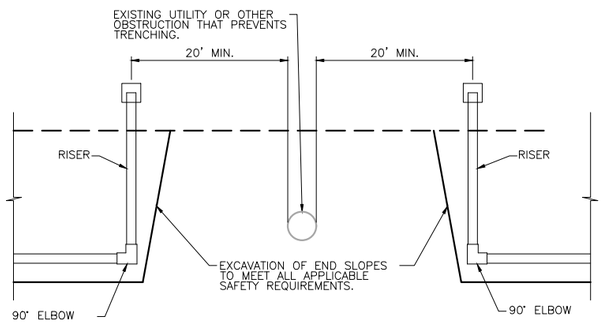

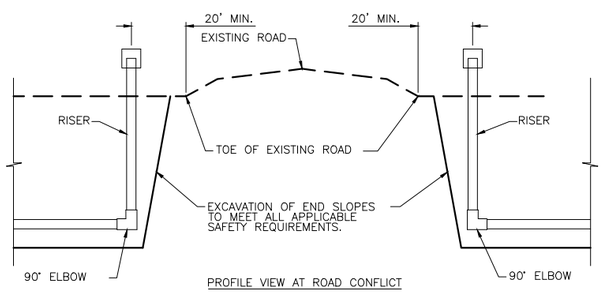

NOTES:

1. UTILITY LOCATING IS THE RESPONSIBILITY OF THE CONTRACTOR. ADDITIONAL RISERS (NOT SHOWN ON PLAN & PROFILE SHEETS) WILL BE REQUIRED WHEN UTILITIES OR OTHER OBSTRUCTIONS ARE ENCOUNTERED.

LEVEE TOE DRAIN – TERMINATION AT ROADS AND UTILITY CONFLICTS
N.T.S.

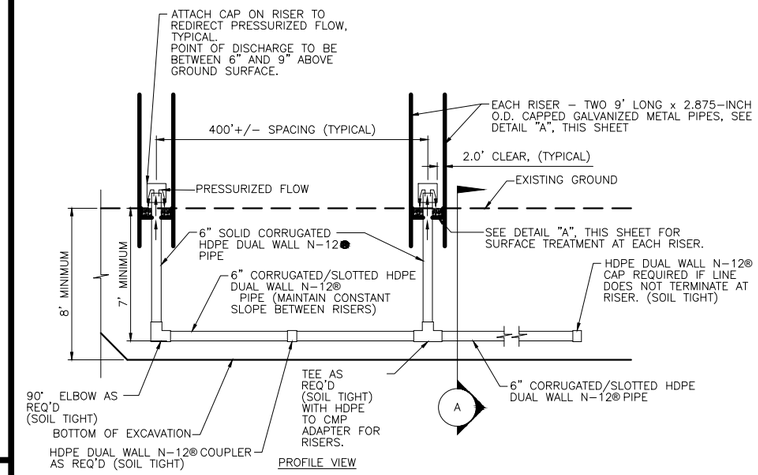

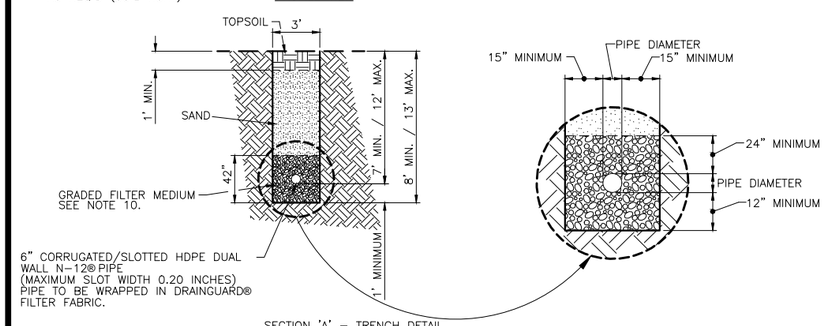

NOTES:

1) ALL EXISTING TOE-DRAIN PIPE TO BE REMOVED AND DISPOSED OF.
2) ALL EXISTING FILTER MEDIA TO BE REMOVED AND DISPOSED OF.
3) ALL EXISTING RISER CAPS SHALL BE SALVAGED TO WICHITA FLOOD CONTROL.
4) HORIZONTAL TRENCH DRAINS SHALL BE A MINIMUM OF 7 FEET DEEP TO PIPE INVERT.
5) MAINTAIN CONSTANT SLOPE OF HORIZONTAL PIPE RUNS BETWEEN VERTICAL RISERS. TRENCH DEPTHS GREATER THAN 7 FEET MAY BE NECESSARY.
6) EXCAVATION SLOPES FOR TOE DRAIN INSTALLATION SHALL MEET ALL APPLICABLE SAFETY REQUIREMENTS.
7) ALL CONNECTORS SHALL BE SOIL TIGHT.
8) ALL TOE DRAIN PIPE SHALL BE PERFORATED HDPE DUAL WALL N-12® PIPE OR EQUIVALENT WITH 0.20 INCH MAXIMUM SLOT WIDTH AND A MINIMUM PIPE STIFFNESS OF 46 PSI.
9) CONTRACTOR TO SUBMIT SHOP DRAWINGS FOR CAP ON RISER PIPE DISCHARGE.
10) FILTER MEDIA SHALL CONSIST OF HARD DURABLE STONE MEETING ASTM C33 SPECIFICATION FOR CONCRETE AGGREGATE. REFER TO GENERAL NOTES SHEET FOR GRADATION REQUIREMENTS.

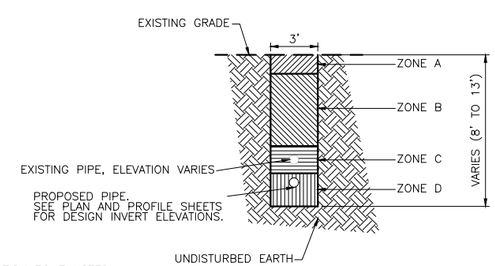

EXCAVATION ZONE NOTES:

ZONE A – EXCAVATE AND STOCKPILE 1' DEPTH OF TOPSOIL MATERIAL.
ZONE B – EXCAVATE AND STOCKPILE MATERIAL THAT IS SUITABLE FOR BACKFILL AFTER NEW TRENCH DRAIN INSTALLATION. DISPOSE OF ANY OBJECTIONABLE MATERIAL ENCOUNTERED. LOWER LIMIT OF ZONE B IS EQUAL TO THE UPPER LIMIT OF EXISTING FILTER MEDIA.
ZONE C – EXCAVATE AND DISPOSE OF EXISTING TRENCH DRAIN PIPE AND FILTER MEDIA.
ZONE D – IF NECESSARY, CONTINUE EXCAVATION UNTIL AN ELEVATION OF 1-FOOT BELOW THE PROPOSED PIPE INVERT IS REACHED. ALL NOTES FOR ZONE B ABOVE ALSO APPLY TO ZONE D.

(ALL WORK SHALL BE DONE IN ACCORDANCE WITH THE NOTES ON SHEET G-0.02)

EXCAVATION ZONES – SECTION VIEW

LEVEE TOE DRAIN DETAIL
N.T.S.

MARK	DESCRIPTION	DATE	APPR

AMEC Earth & Environmental, Inc.
1129 SW Wanamaker
Topeka, Kansas 66604
Phone: (785) 272-6830
Fax: (785) 272-6878

CITY OF WICHITA

UPPER LEVEE "C" TOE DRAIN INSTALLATION
WICHITA-VALLEY CENTER LOCAL FLOOD PROTECTION PROJECT
WICHITA, KANSAS

PREPARED FOR
THE CITY OF WICHITA, KANSAS
455 N. Main
Wichita, KS 67202

..\sample seal\Seal.jpg

DESIGNED BY: Larry Sample, PE		DATE: 08-13-2012
DWN BY: RES	CKD BY: LBK	APP BY: L. SAMPLE
FILE NAME: $FILES$		

AMEC PROJ. NO. 5-6150-0001

TOE DRAIN DETAILS

G-0.03

SHEET 4 OF 24