NOTE:
RIM ELEVATIONS PROVIDED ARE APPROXIMATE AND MAY REQUIRE FIELD ADJUSTMENT.

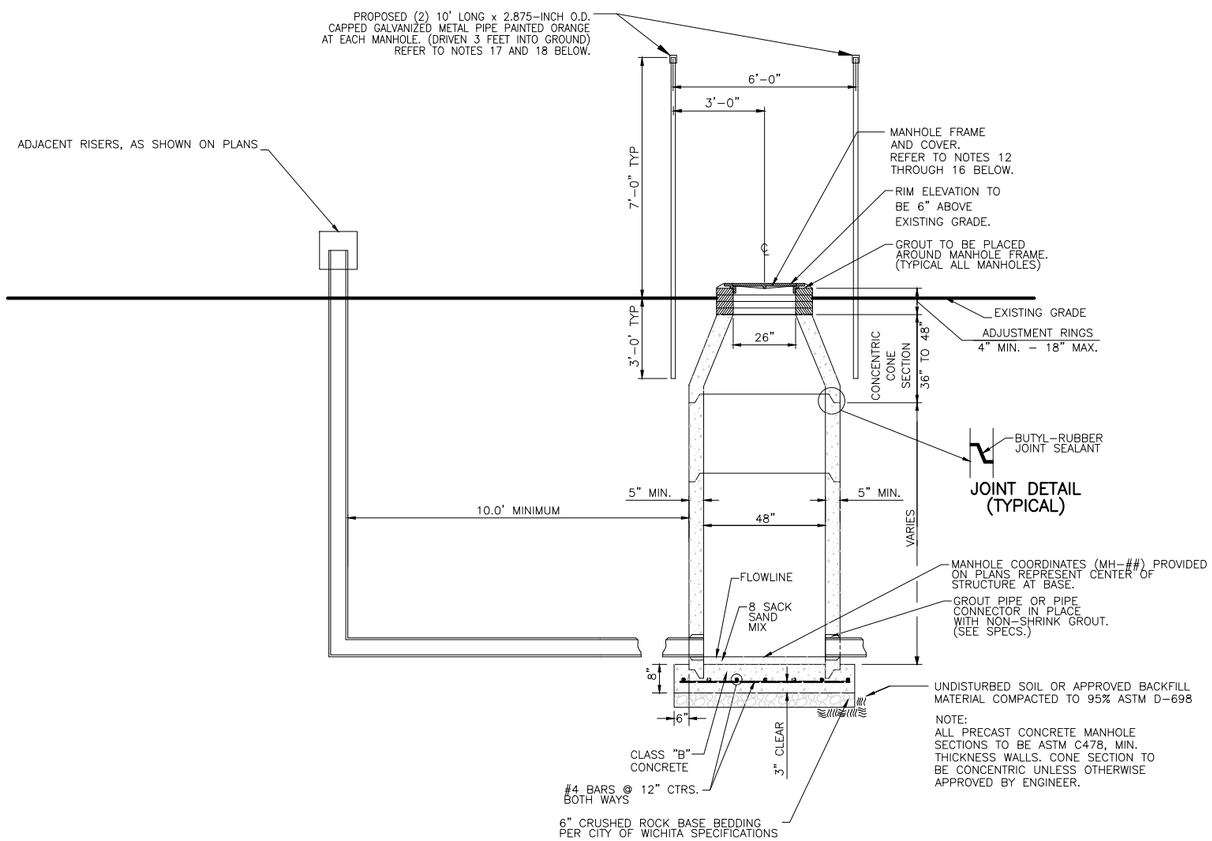

NOTE:
ALL PRECAST CONCRETE MANHOLE SECTIONS TO BE ASTM C478, MIN. THICKNESS WALLS. CONE SECTION TO BE CONCENTRIC UNLESS OTHERWISE APPROVED BY ENGINEER.

MANHOLE DATA		
I.D.	FLOW LINE ELEV. (FT.)	RIM ELEV. (FT.)
MH-1	1309.13	1317.5
MH-2	1309.13	1318.3
MH-3	1293.85	1304.1
MH-4	1293.85	1301.5
MH-5	1293.85	1301.4
MH-6	1291.61	1300.0
MH-7	1291.61	1300.8
MH-8	1291.61	1299.7
MH-9	1286.40	1298.7
MH-10	1286.40	1295.1
MH-11	1286.40	1294.7
MH-12	1283.36	1293.3
MH-13	1283.36	1291.4
MH-14	1283.05	1292.5
MH-15	1283.05	1291.8
MH-16	1259.17	1269.0
MH-17	1259.17	1267.9
MH-18	1256.22	1267.2
MH-19	1256.22	1265.8
MH-20	1254.89	1262.6
MH-21	1255.05	1263.6
MH-22	1253.96	1262.0
MH-23	1255.94	1265.8
MH-24	1255.94	1266.9
MH-25	1247.60	1256.9
MH-26	1247.60	1257.0
MH-27	1247.60	1256.3
MH-28	1244.97	1254.5
MH-29	1244.97	1253.0
MH-30	1244.97	1254.3
MH-31	1244.97	1254.4
MH-32	1240.42	1251.4
MH-33	1240.42	1248.3
MH-34	1240.42	1249.2
MH-35	1236.06	1247.7
MH-36	1236.06	1245.7
MH-37	1236.06	1244.9
MH-38	1236.06	1246.1
MH-39	1240.25	1250.3
MH-40	1240.25	1248.9
MH-41	1240.25	1250.9
MH-42	1240.25	1251.4

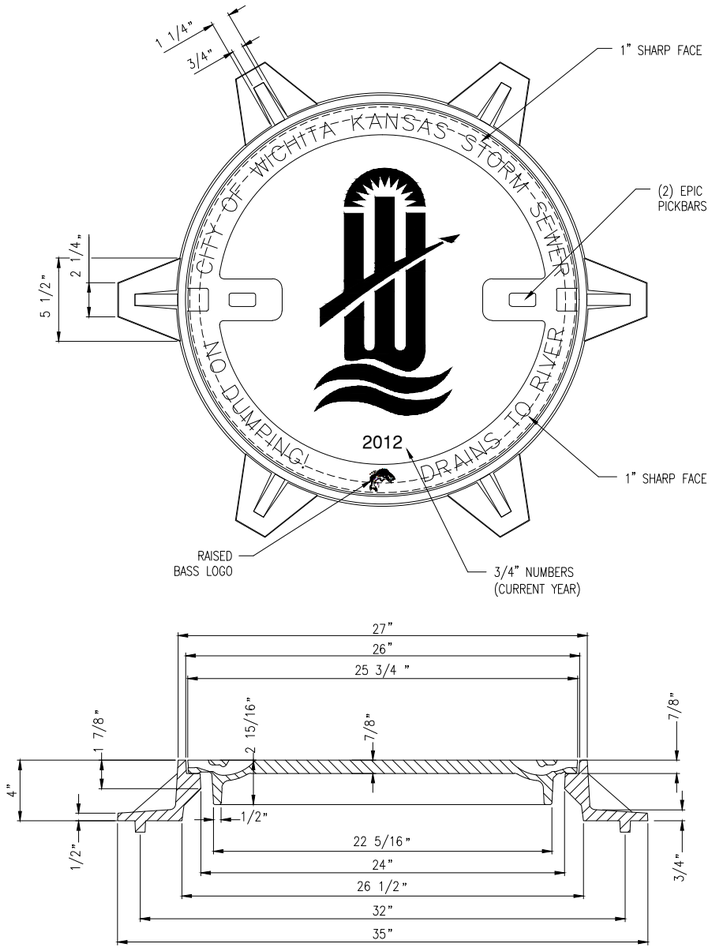

MANHOLE FRAME
DEETER #1261 OR EJIW #1936-Z4

NOTE:
1. FURNISHED WITH MACHINED HORIZONTAL BEARING SURFACE.
2. NOT TO BE USED UNDER PAVEMENT.
3. COVER TO BE DEETER #1261 OR EJIW #1936A1

MANHOLE FRAME/COVER
N.T.S.

GENERAL NOTES

1. IF, IN THE OPINION OF THE ENGINEER, THE MANHOLE SUBGRADE APPEARS UNSTABLE, THE CONTRACTOR WILL HAVE THE OPTION TO COMPACT SUBGRADE AS SHOWN OR INCREASE THE THICKNESS OF THE MANHOLE BASE AS DIRECTED BY THE ENGINEER.
2. STEEL REINFORCING WILL BE REQUIRED IN ALL MANHOLE BASES.
3. ALL MANHOLE CONSTRUCTION SHALL BE WATER TIGHT.
4. TOP OF MANHOLE FLOOR SLAB SHALL BE AT LEAST 3 INCHES BELOW THE FLOW LINE OF THE OUTLET PIPE TO INSURE SUFFICIENT MINIMUM THICKNESS OF SHAPED INVERT.
5. ALL PRECAST CONCRETE MANHOLE SECTIONS SHALL CONFORM TO THE LATEST REVISION OF ASTM C-478 AS MODIFIED BY THE SPECIFICATIONS.
6. CONCRETE USED FOR MANHOLE CONSTRUCTION SHALL CONFORM TO CITY OF WICHITA SPECIFICATIONS FOR CONCRETE PAVEMENT MIX.
7. PRECAST MANHOLES SHALL BE SET AT LEAST 4 INCHES INTO MANHOLE BASE.
8. MANHOLES WITH PRECAST BASES MAY BE USED AT THE CONTRACTORS OPTION. THESE MANHOLES SHALL HAVE AN 8 INCH MINIMUM BASE THICKNESS AND SHALL BE PLACED ON AN 8 INCH MIN. CRUSHED ROCK BASE. PIPES SHALL BE ENCASED WITH CRUSHED ROCK TO AT LEAST 3 FEET FROM THE MANHOLE WALL.
9. CONTRACTOR SHALL REMOVE LIFTING HOOKS AFTER INSTALLATION. RECESSES IN MANHOLE WALL SHALL BE GROUTED FLUSH TO THE MANHOLE WALL WITH HYDRAULIC CEMENT AFTER THE MANHOLE IS IN PLACE. LIFTING HOLES THRU THE MANHOLE WALL WILL NOT BE ACCEPTED.
10. THE ENDS OF ALL PIPES IN MANHOLES SHALL BE CUT OFF FLUSH WITH THE INSIDE FACE OF THE MANHOLE WALL.
11. MANHOLE INVERT SHALL BE SHAPED WITH 8 SACK SAND MIX CONCRETE TO CREATE FLOW CHANNELS AND TO INCREASE HYDRAULIC EFFICIENCY SUCH THAT THE MANHOLE WILL BE SELF CLEANING BETWEEN ALL INLET AND/OR OUTLET PIPES.
12. CONTRACTOR TO SUBMIT SHOP DRAWINGS OF PRECAST MANHOLE, FRAME AND COVER FOR APPROVAL.
13. MANHOLE CASTINGS SHALL BE MANUFACTURED USING GOOD QUALITY GRAY IRON CONFORMING TO CLASS 30 OF A.S.T.M. DESIGNATION A-48. THE FINISHED CASTINGS SHALL BE OF UNIFORM QUALITY, FREE FROM BLOWHOLES, POROSITY, HARDSPOTS, SHRINKAGE DISTORTIONS OR OTHER DEFECTS.
14. THE OUTSIDE CIRCUMFERENCE OF THE VERTICAL FACE OF THE COVER AND THE INSIDE CIRCUMFERENCE OF THE VERTICAL FACE IN THE FRAME RECESS SHALL BE MANUFACTURED TO TOLERANCES SUCH THAT THE CLEARANCE BETWEEN THE COVER AND FRAME WILL NOT EXCEED 1/8" AT ANY POINT AROUND THE CIRCUMFERENCE OF THE COVER. THE SEATING SURFACES BETWEEN THE COVER AND FRAME SHALL BE MACHINED SUCH THAT THESE SEATING SURFACES SHALL MAKE FULL CONTACT FOR THEIR FULL CIRCUMFERENCE TO PRECLUDE THE COVER FROM ROCKING IN THE FRAME.
15. THE SOLID MANHOLE COVER AND FRAME SHALL BE A DEETER #1261, EJIW #1936A1, OR APPROVED EQUAL.
16. THE MANHOLE FRAME SHALL BE A DEETER #1261, EJIW #1936-Z4, OR APPROVED EQUAL.
17. GALVANIZED METAL PIPES SHALL BE 2.875" O.D., 0.203-INCH THICK AND 5.97 lbs./lin. ft. WITH A 0.375" (3/8") DIAMETER HOLE DRILLED (1") DOWN FROM THE TOP OF THE GALVANIZED METAL PIPE.
18. PIPES SHALL BE PAINTED IN ACCORDANCE WITH ASTM D 6386. REFER TO THE AMERICAN GALVANIZERS ASSOCIATION'S "GUIDE TO PREPARING HOT-DIP GALVANIZED STEEL FOR PAINT" (http://www.galvanizeit.org/images/uploads/publicationPDFs/Paint_Guide_Galvanized_Steel.pdf)

CONCENTRIC MANHOLE DETAIL (MH-##)
N.T.S.

MARK	DESCRIPTION	DATE	APPR

AMEC Earth & Environmental, Inc.
1129 SW Wanamaker
Topeka, Kansas 66604
Phone: (785) 272-4630
Fax: (785) 272-6878

CITY OF WICHITA

UPPER LEVEE "C" TOE DRAIN INSTALLATION
WICHITA-VALLEY CENTER LOCAL FLOOD PROTECTION PROJECT
WICHITA, KANSAS

PREPARED FOR
THE CITY OF WICHITA, KANSAS
455 N. Main
Wichita, KS 67202

DESIGNED BY: Larry Sample, PE		DATE: 08-13-2012
DWN BY: RES	CKD BY: LBK	APP BY: L. SAMPLE
FILE NAME: SFILESS		

AMEC PROJ. NO. 5-6150-0001

TOE DRAIN DETAILS

G-0.04

SHEET 5 OF 24