LEGEND

- Contraction Joint
- Longitudinal Joint
- 5'-0" Transition
- 10'-0 Median Nose Transition
- Match Existing

SCALE

10' 0 10' 20'

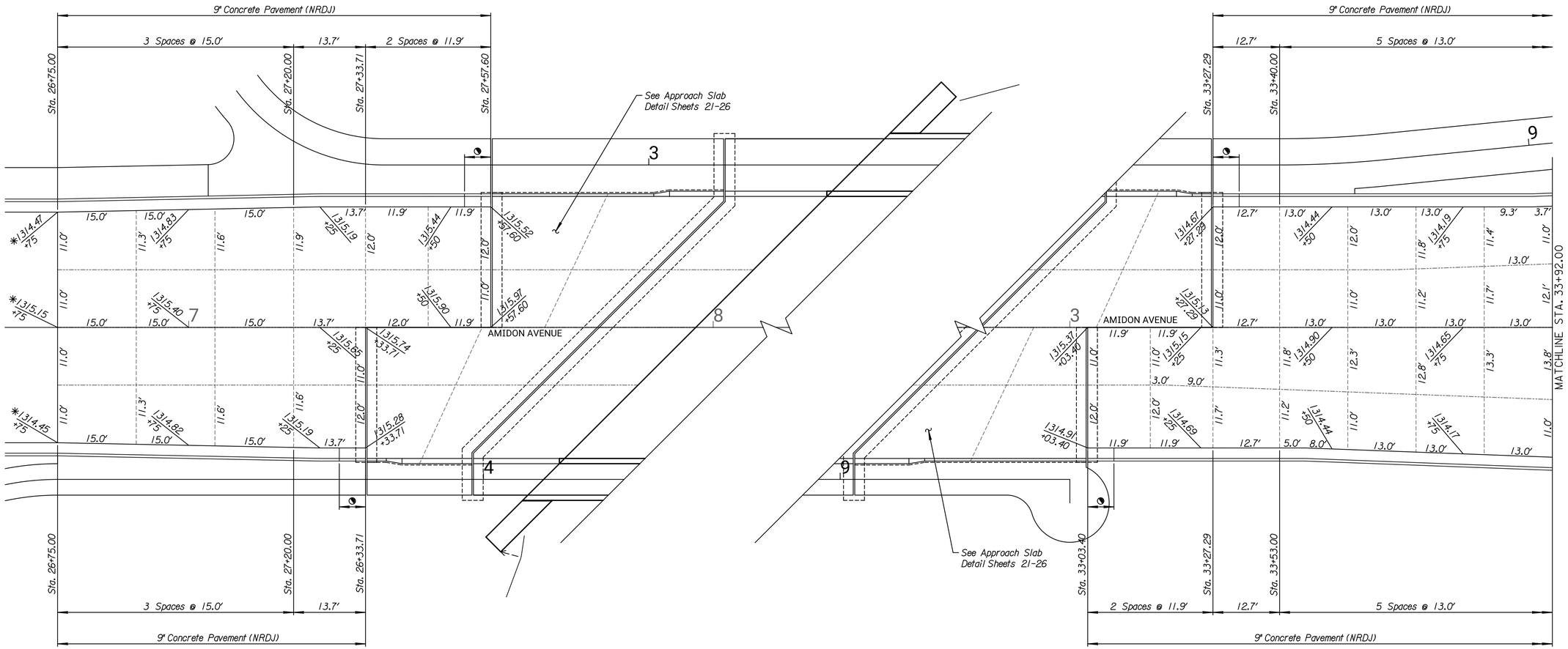



TranSystems
245 NORTH WACO
SUITE 222
WICHITA, KANSAS 67202
PHONE: 316-303-3000
FAX: 316-462-5629


CONSULTANTS:

AMIDON AVENUE BRIDGE
at ARKANSAS RIVER

WICHITA, KANSAS

CITY OF WICHITA

REVISIONS:

| MARK | DATE | DESCRIPTION |
|---|---|---|

PROJ NO: E1010-40250621
SCALE: 1"=10'
DATE: 7/13/2022
DESIGNED BY: CKC
DRAWN BY: CKC
CHECKED BY: MDB

SHEET TITLE:

AMIDON AVENUE
JOINTING PLAN
STA. 26+75.00 TO
STA. 33+92.00

SHEET NO.

13

SHEET 13 OF 128

IF THIS DRAWING IS LESS THAN 22" X 36" IT IS A REDUCED SIZE DRAWING

dcrosero
7/13/2022 - 10:54:45 AM c:\transystems\pw_local\transyscorp-pw1\dacrosero\d1083517C-INT-M01-101.DGN