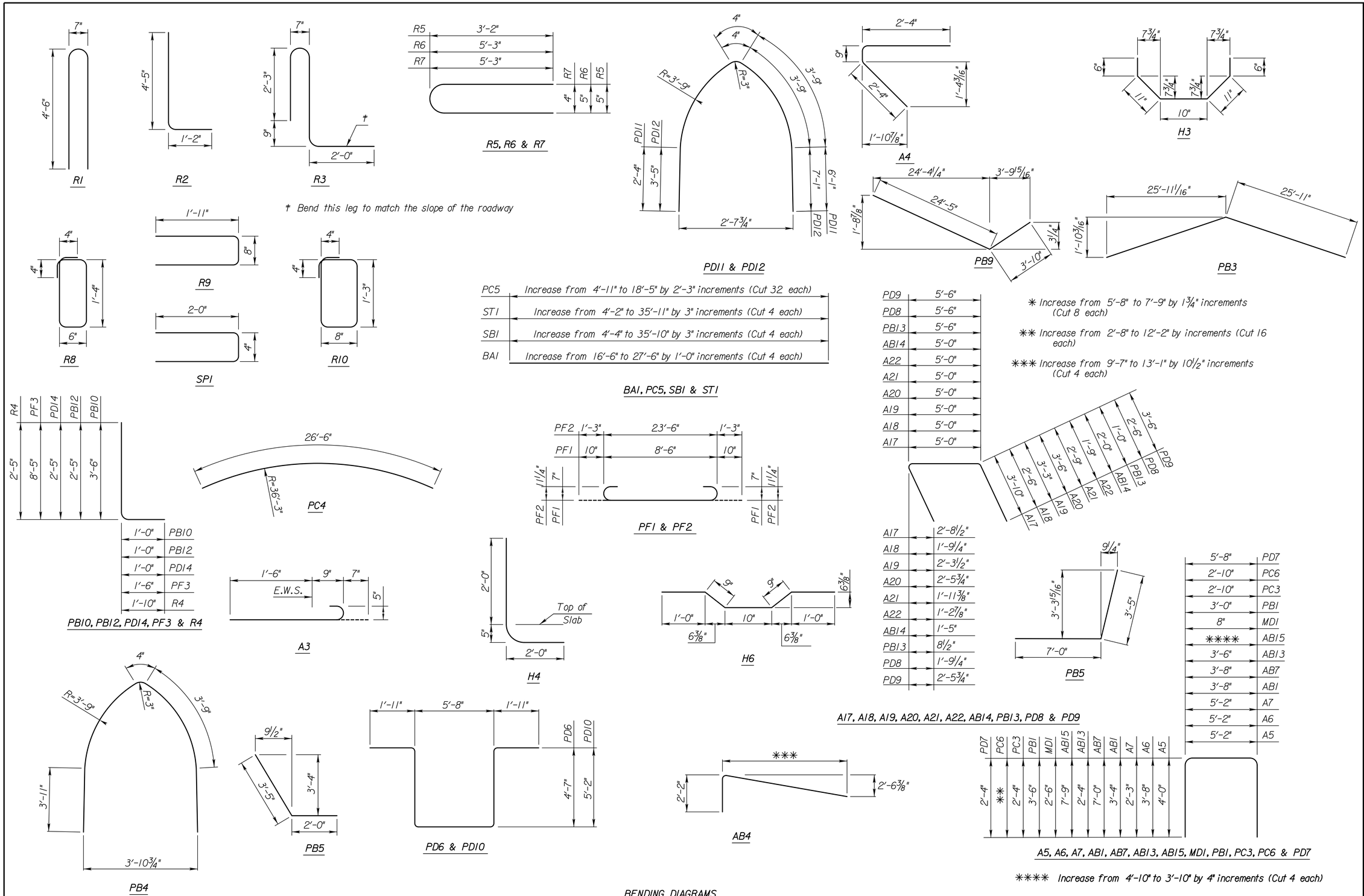

IF THIS DRAWING IS LESS THAN 22" X 36" IT IS A REDUCED SIZE DRAWING

PREPARED BY

BG CONSULTANTS, GROUP, INC.
727 NORTH WACO
SUITE 260
WICHITA, KANSAS 67203
PHONE: 316-352-9333

CONSULTANTS:

AMIDON AVE. BRIDGE
AT ARKANSAS RIVER

WICHITA, KANSAS

CITY OF WICHITA

REVISIONS:			
MARK	DATE	DESCRIPTION	

PROJ NO: E1010-4025062
SCALE:
DATE: 07/08/2022
DESIGNED BY: JBM
DRAWN BY: JBM
CHECKED BY: WBS

SHEET TITLE:

BENDING DIAGRAMS

SHEET NO.
67
SHEET 67 OF 128

hotpress
SDATES - $TIMES - $FILES