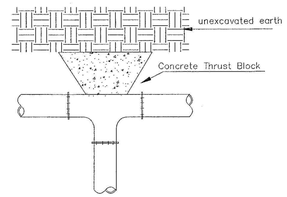

TEE

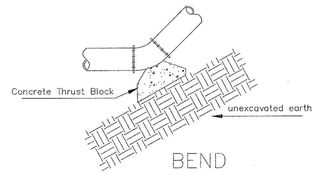

BEND

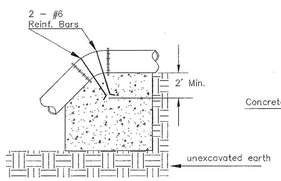

VERTICAL BEND

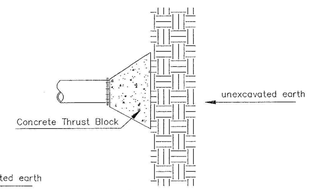

PLUG

PIPE SIZE	THRUST AT FITTINGS IN TONS–AT 150#/IN^{2}P					
	PLUG	90°	45°	22 1/2°	11 1/4°	TEE
6"	2.8	3.95	2.15	1.09	.55	2.8
8"	4.9	6.95	3.75	1.90	.96	4.9
12"	11.4	16.1	8.75	4.45	2.25	11.4
16"	20.15	28.5	15.4	7.85	3.95	20.15
20"	31.15	44.0	23.85	12.15	6.10	31.15
24"	44.55	63.0	34.1	17.4	8.75	44.55

TYPICAL THRUST BLOCKS

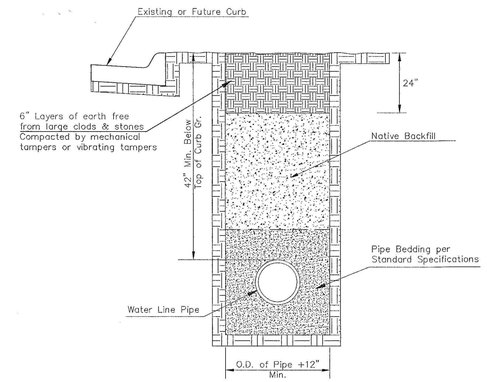

TRENCH COMPACTION IN ROAD RIGHT–OF–WAY

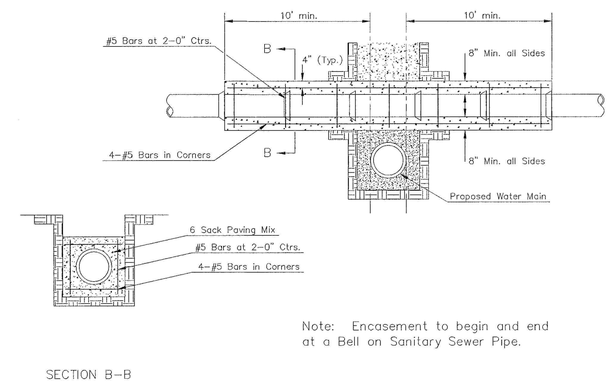

Note: Encasement to begin and end at a Bell on Sanitary Sewer Pipe.

REINFORCED CONCRETE ENCASEMENT OF SANITARY SEWER

SIDE VIEW

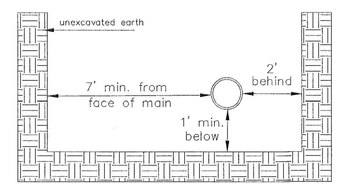

Note: When shoring is required it is to be per The City of Wichita Standard Specifications.

TOP VIEW

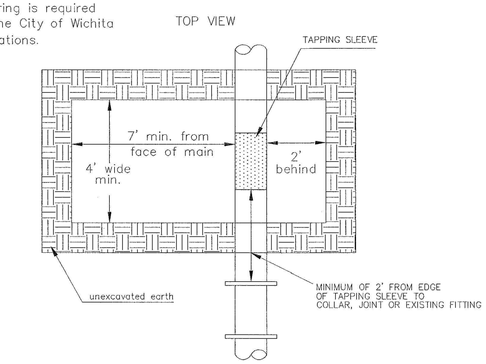

EXCAVATION FOR WET TAP

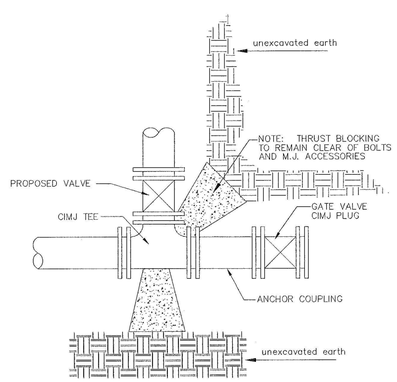

KEY BLOCK DETAIL

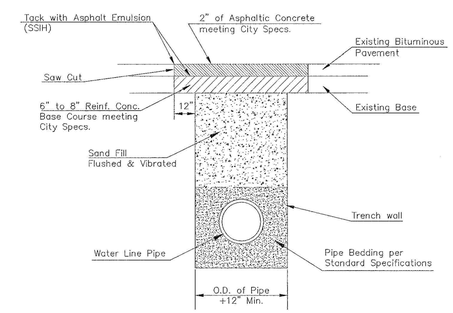

PAVEMENT REPLACEMENT & TRENCH COMPACTION UNDER EXISTING AND PROPOSED CITY ROADS

* PLANS GOVERN
UNLESS OTHERWISE NOTED ON PLANS

REVISED: JULY 2015

GARY L. JANZEN LICENSED 16294 KANSAS PROFESSIONAL ENGINEER
07/21/15

CITY OF WICHITA
PUBLIC WORKS & UTILITIES
ENGINEERING DIVISION

MISCELLANEOUS WATER DETAILS

CITY ENGINEER
GARY JANZEN, P.E..

PROJECT NUMBER	OCA NUMBER	DATE

CITY ENGINEER'S OFFICE
CITY HALL - SEVENTH FLOOR
455 NORTH MAIN STREET
WICHITA, KANSAS 67202-1620
(316) 268-4501

SHEET

WL-104

PEC
PROFESSIONAL ENGINEERING CONSULTANTS
303 SOUTH TOPEKA
WICHITA, KS 67202
316-262-2691 www.pec1.com

CITY OF WICHITA

SANITARY SEWER AND WATERLINE IMPROVEMENTS
TO SERVE
NORTH JUNCTION UTILITY RELOCATION
GARY JANZEN, P.E. - CITY ENGINEER
SS: CITY OF WICHITA PROJ. NO. 468-2021-002929
WL: CITY OF WICHITA PROJ. NO. 448-2021-034139

Issue:

JOB NO.	35-210253-000-0042
DATE	01 JUNE 2021
PM	TBK
DESIGNED BY	TBK
DRAWN BY	KTD
CHECKED BY	RWG

MISCELLANEOUS WATER DETAILS

CU-401

SAVED 11/23/2021 4:34:04 PM BY KURTIS.DEKAT
PLOTTED 9/13/2022 11:25:40 AM BY KURTIS DEKAT
U:\WICHITA-CIVIL\2021\210253\000\MUN\DRAWINGS\210253-000-CU401.DWG