SERVICE BOX CONSTRUCTION/INSTALLATION DETAILS

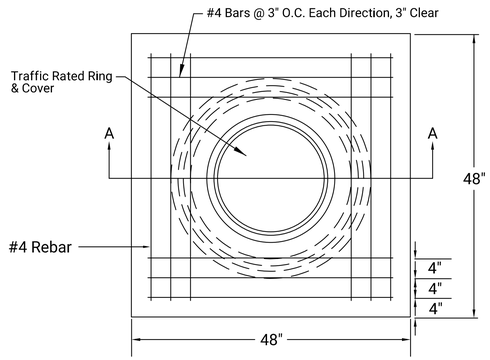

PRECAST CONCRETE SERVICE BOX
(36" I.D. X 54" RCP) with 6" cap

SERVICE BOX:
1. CONDUIT CONNECTION TO BE 4"-8" INSIDE FACE OF SIDE WALL, CONDUIT TO DRAIN INTO SERVICE BOX.
2. CONDUIT CONNECTIONS TO SERVICE BOX SHALL BE TERMINATED WITH PLASTIC CONDUIT BUSHING.
3. CONDUIT SHALL BE SEALED WITH APPROVED SEALER AT INSIDE WALL FACE.
4. ALL SERVICE BOXES TO HAVE 8" OF 3/4" CLEAN GRAVEL WITH FILTER FABRIC PLACED PRIOR TO SERVICE BOX INSTALLATION.
5. NO MORE THAN TWO (2) TEIRS OF BRICKS SHALL BE USED FOR TOP ADJUSTMENTS. BRICKS SHALL BE GROUTED.
6. SERVICE BOX AND LID SHALL BE TRAFFIC RATED.

CONDUIT:
1. SLOPE CONDUIT TO DRAIN AS DIRECTED BY THE ENGINEER.
2. ALL CONDUIT SHALL BE GALVANIZED RIGID STEEL CONDUIT (GRC) UNLESS APPROVED OTHERWISE BY ENGINEER.

NO 90 DEGREE ELBOWS UNLESS APPROVED BY TRAFFIC MAINTENANCE

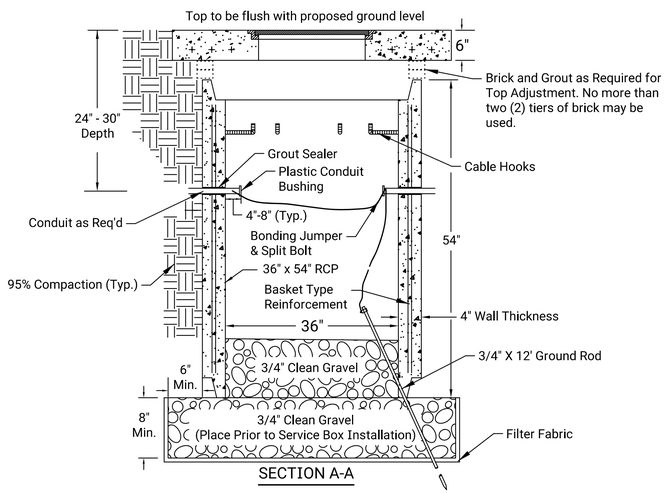

SECTION A-A

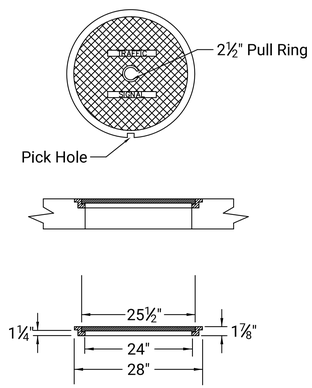

RING & COVER DETAIL

COVER SHALL INCLUDE "TRAFFIC SIGNAL"

CABINET TRACER WIRE CONNECTION DETAIL

1. TRACER WIRE TERMINAL SHALL BE SOLID BRASS, BRONZE ALLOY, OR COPPER CLAD STEEL & ACCESSIBLE FROM THE OUTSIDE OF THE CABINET.
2. TERMINAL SHALL BE COMPLETELY ISOLATED FROM CABINET & GROUNDING. RUBBER ISOLATORS ARE NOT ALLOWED.
3. HOLE IN CABINET SHALL BE MADE WATER TIGHT.
4. MAINTAIN 1.5" MINIMUM CLEARANCE FOR TERMINAL.
5. APPLY THREAD LOCK SEALANT TO REDUCE TAMPERING.
6. CRIMP STYLE WIRE TERMINALS CONNECTING TRACER WIRE TO TRANSMITTER DIRECT CONNECT POST ARE NOT PERMITTED.
7. TERMINAL LOCATION - TERMINALS SHALL BE MOUNTED IN ORDER TO PREVENT ACCIDENTAL "SNAGGING". LOCATIONS SHOULD BE A MINIMUM OF 1.5" FROM CABINET EDGES.
   A. PAD MOUNTED CABINET (332L) - TERMINAL SHALL BE LOCATED IN THE BOTTOM LIP OF THE CABINET UNDER THE BACK CABINET DOOR, CENTERED.
   B. POLE MOUNTED CABINET (336L) - TERMINAL SHALL BE MOUNTED ON THE BOTTOM SIDE OF THE CABINET, NEAREST THE POLE.

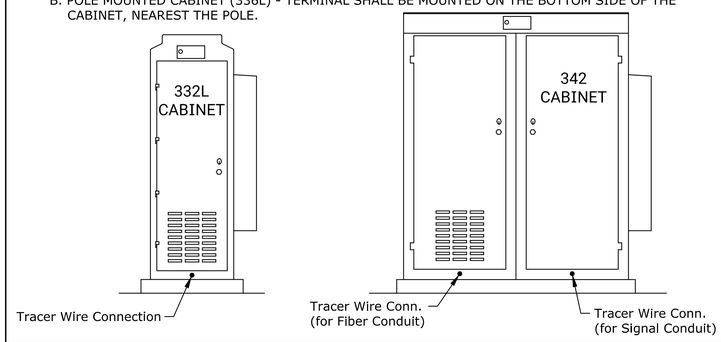

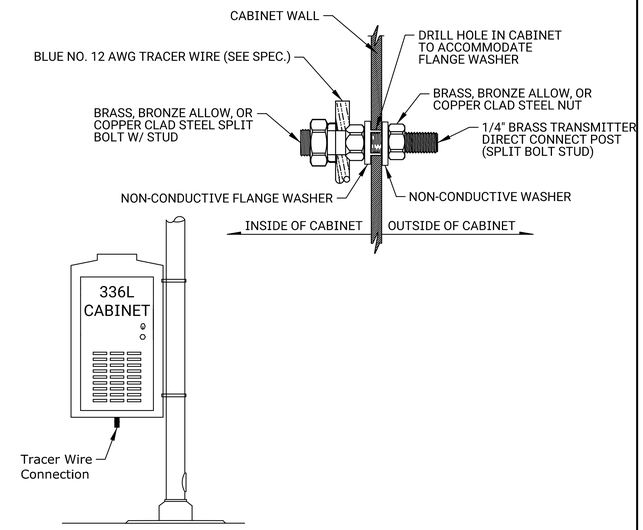

CONDUIT BORING & TRENCH DETAILS

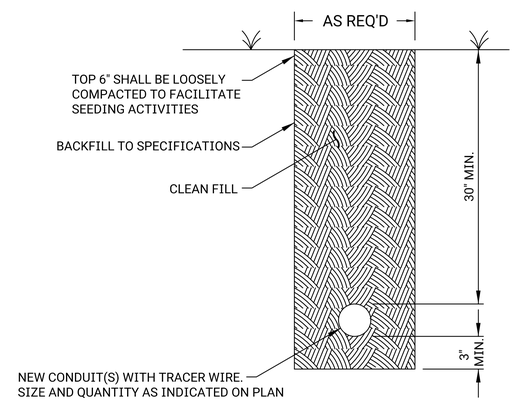

GENERAL:
1. ALL CROSSINGS UNDER ROADWAY SHOULD HAVE A MINIMUM OF 5 FT OF COVER BELOW CROWN GRADE OR 3 FT COVER BELOW DITCH GRADE.

2. NO 90° ELBOWS UNLESS APPROVED BY TRAFFIC MAINTENANCE

3. INSTALL TRACER WIRE FOR LOCATING PURPOSES IN ALL CONDUIT RUNS. WHEN MULTIPLE CONDUITS SHARE THE SAME TRENCH OR BORE, TRACER WIRE TO BE LOCATED IN TOP CONDUIT ONLY.

4. BORING:
   A. INSTALL BORED CONDUIT WITHOUT DISTURBING THE EXISTING SURFACE. PLACE BORED CONDUIT BY BORING OR OTHER APPROVED MEANS. LOCATE ALL BORE PITS AND SPOIL PILES A MINIMUM OF 4 FEET FROM THE EDGE OF THE PAVED ROADWAY OR SHOULDER SURFACE AND BARRICADE, FENCE, OR PROTECT THE PITS BY SOME OTHER ACCEPTABLE METHOD FROM ERRANT VEHICLES OR PEDESTRIANS.

5. TRENCHING:
   A. DEPTH TO BE 30" MINIMUM WITH ROCK & RUBBLE FREE BACKFILL TO SERVE AS BEDDING MATERIAL. MAINTAIN MINIMUM CONDUIT DEPTH IN TRENCH.
   B. BACKFILL TO BE COMPACTED IN 6" LOOSE LIFTS BY HAND OR MECHANICAL TAMPING TO PREVENT SETTLEMENT.
   C. EXCAVATE TRENCHES TO THE WIDTH AND DEPTH NECESSARY FOR CONDUIT INSTALLATION AS SHOWN IN THE PLANS. DO NOT USE MATERIAL WHICH MIGHT CAUSE MECHANICAL DAMAGE TO THE CONDUIT FOR BACKFILLING BELOW AN ELEVATION 6 INCHES ABOVE THE CONDUIT. CLEAN THE BOTTOM OF THE TRENCH OF SUCH MATERIAL BEFORE THE CONDUIT IS PLACED. OBTAIN APPROVAL BY THE ENGINEER OF THE TRENCH PRIOR TO CONDUIT PLACEMENT. BACKFILL AND COMPACT ALL TRENCHES.

EXPANSION FITTING

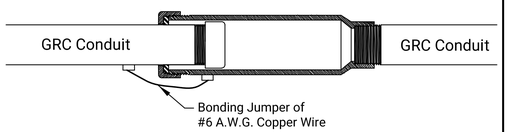

THE CONTRACTOR SHALL INSTALL THE CONDUIT AND CONNECTOR ASSEMBLY TO PERMIT A 1" MINIMUM LONGITUDINAL TRAVEL IN EITHER DIRECTION.

CONDUIT/DETECTOR WIRE INSTALLATION DETAILS

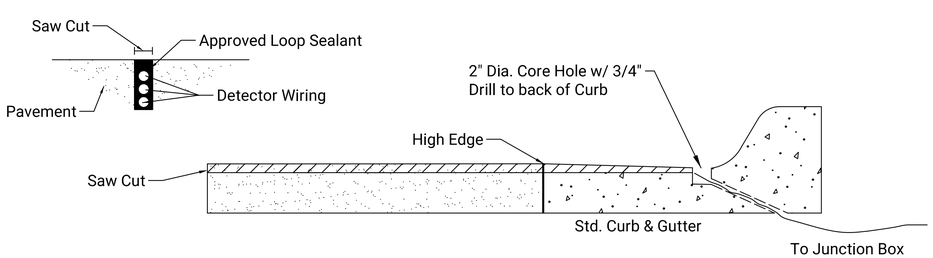

NO.	DATE	REVISIONS	BY	APP'D
3				
2				
1				

CITY OF WICHITA
PUBLIC WORKS & UTILITIES ENGINEERING DIVISION

SERVICE BOX, CONDUIT, & TRACER WIRE CONNECTION CONSTRUCTION/INSTALLATION

TRAFFIC ENGINEER: MIKE ARMOUR, P.E. — APP'D 01/27/22

PROJECT NUMBER	ORG NUMBER	DATE
472-085773		12/20/2022

CITY ENGINEER'S OFFICE
CITY HALL - SEVENTH FLOOR
455 NORTH MAIN STREET
WICHITA, KANSAS 67202-1620
(316) 268-4501

SHEET 10

TR-108