NOTE TO DESIGNER: Design shall identify cabinet type on Traffic Signal Quantity Sheet. Typically, the Type 332L Cabinet shall be used unless intersection includes (or future) fiber connections or integration with transportation system.

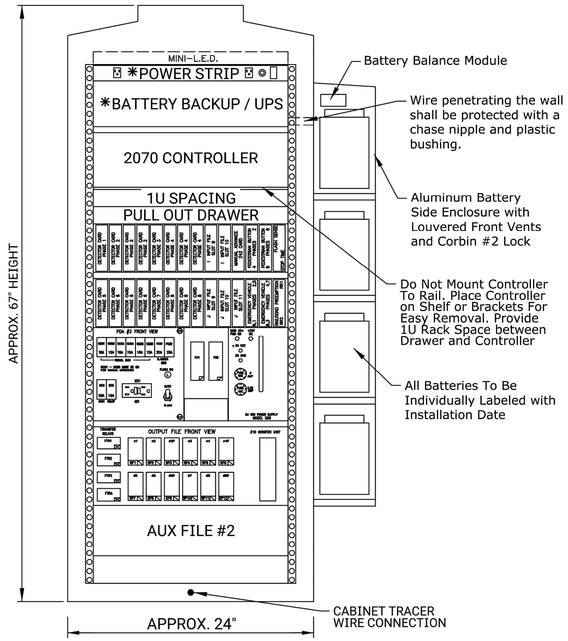

TYPICAL TYPE 332L CABINET (PAD MOUNT)

Approximate 67" H x 24" W x 30" D
*Locate Power Strip & BBS on Backside of Cabinet

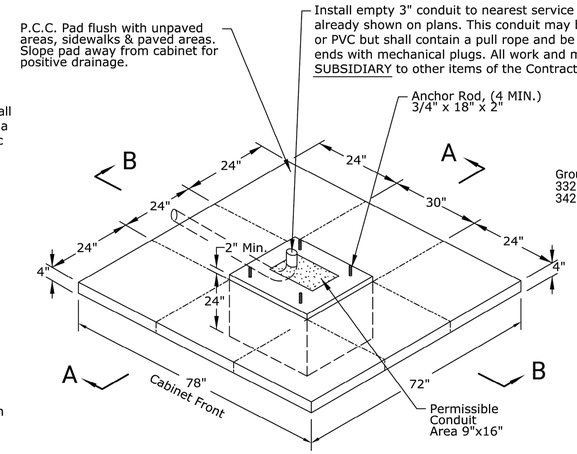

TYPE 332L PAD

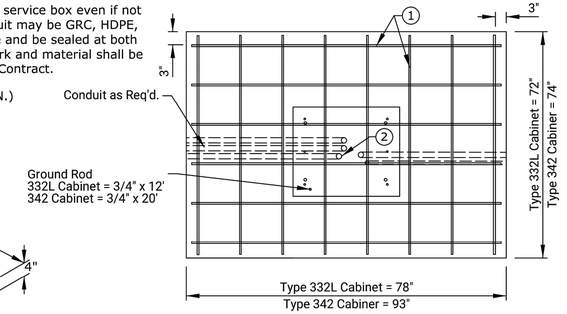

CABINET FOUNDATION NOTES:

1. ALL REINFORCING BAR USED IN THE CONSTRUCTION OF THE CABINET FOUNDATION SHALL BE NO. 4 BARS, EVENLY SPACED AT 12 IN SPACING, +/- 1.5 IN.

   6"x6"-W4xW4 WELDED WIRE FABRIC (WWF) MAY BE USED IN LIEU OF REINFORCING BAR.

2. REINFORCEMENT SHALL BE ADJUSTED TO ACCOMMODATE CONDUIT.

3. MINIMUM NO. 4 COPPER GROUNDING CONDUCTOR FROM CABINET EQUIPMENT GROUND BUS TO GROUND ROD.

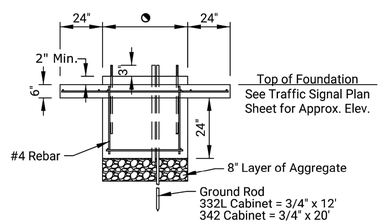

SECTION "A-A"

Type 332L Cabinet = 24"
Type 342 Cabiner = 26"

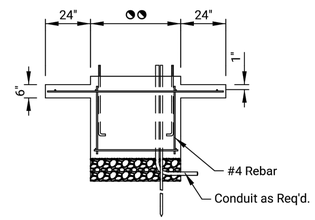

SECTION "B-B"

Type 332L Cabinet = 30"
Type 342 Cabiner = 45"

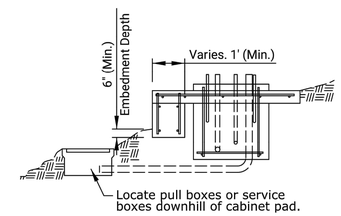

FOUNDATION ON SLOPE DETAIL

1. All reinforcing bar shall be No. 4 bars, evenly spaced at 12" spacing, +/- 1.5".
2. Additional concrete, material, and labor required for cabinet foundation on slope shall be SUBSIDIARY to other items of the contract.

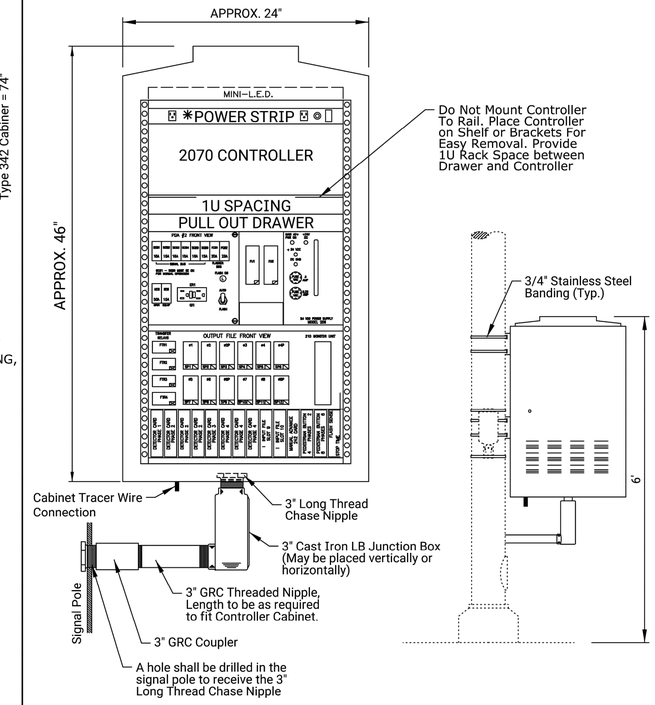

TYPICAL TYPE 336L CABINET (POLE MOUNT)

Approximate 46" H x 24" W x 22" D
*Locate Power Strip on Backside of Cabinet

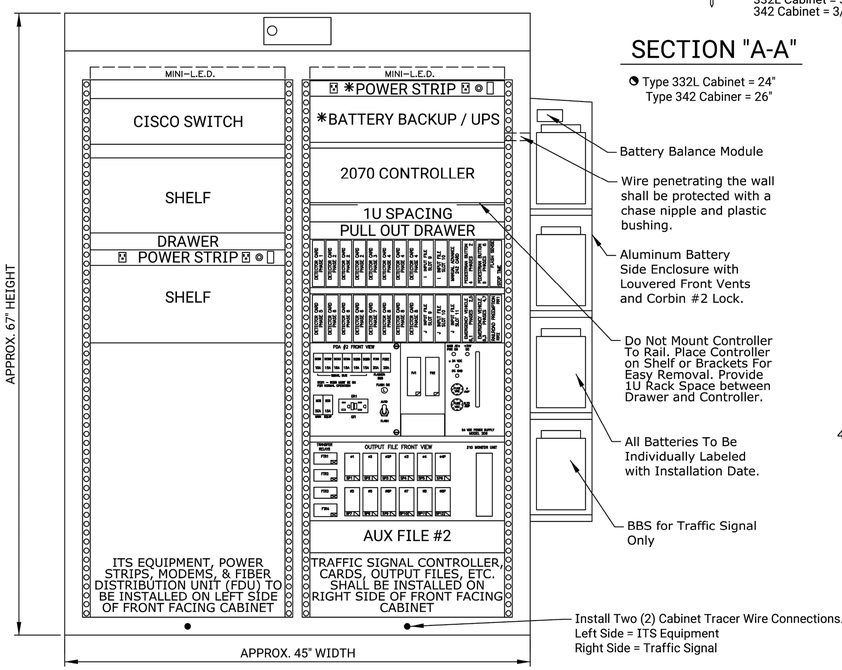

TYPICAL TYPE 342 CABINET (PAD MOUNT)

Approximate 67" H x 45" W x 26" D
*Locate Power Strip & BBS on Backside of Cabinet

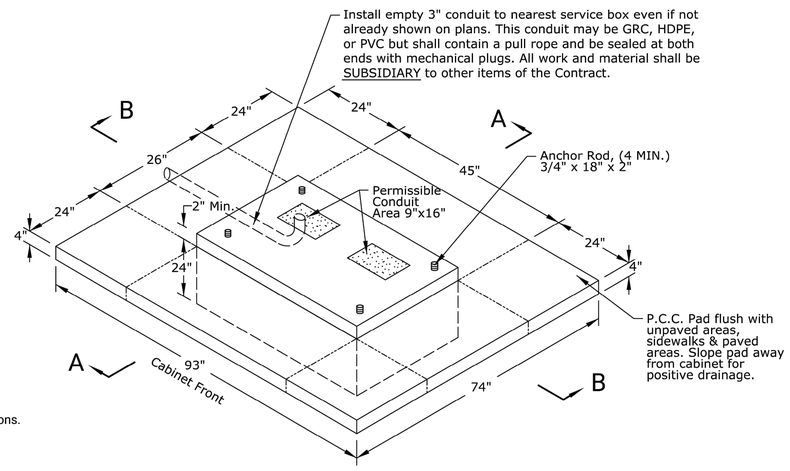

TYPE 342 PAD

NOTE:

1. CABINET BASE DIMENSIONS MAY VARY DEPENDING ON MANUFACTURER. CONTRACTOR SHALL VERIFY DIMENSIONS AND ANCHOR BOLT LOCATIONS FROM MANUFACTURER PRIOR TO CONSTRUCTING BASE.
2. All CABINETS SHALL BE A MINIMUM OF 0.125" NATURAL ALUMINUM AND INCLUDE A 19" EIA RACK.
3. ALL CABINETS SHALL INCLUDE A TRACER WIRE CONNECTION AND ANODES. SEE SIGNAL STANDARDS FOR DETAILS.
4. SIGNAL CONTROLLER SHALL NOT BE MOUNTED DIRECTLY TO 19" EIA RACK BUT SHALL SIT ON SHELF/BRACKETS TO ALLOW EASY REMOVAL.
5. ALL CONDUITS SHALL BE SEALED WITH APPROVED MATERIAL. EMPTY CONDUITS SHALL CONTAIN PULL ROPE AND SEALED WITH MECHANICAL PLUG.
6. ANTENNA(S) IF USED, SHALL BE PLACED WITHIN THE CABINET IF SIGNAL QUALITY IS ADEQUATE AS DETERMINED BY THE ENGINEER THROUGH SIGNAL STRENGTH TESTING BY THE CONTRACTOR.
7. GROUND RODS TO BE POSITIONED AND SHOWN TO INSPECTOR BEFORE POURING BASE.
8. GROUND RODS FOR 342 CABINETS SHOULD BE 3/4" X 20'. TWO (2) 3/4" X 12' GROUND RODS MAY BE USED IN LIEU OF A SINGLE 20' GROUND ROD. ALL OTHER CABINET GROUND RODS SHALL BE 3/4" X 12'.

NO.	DATE	REVISIONS	BY	APP'D
1				
2				
3				

J:\Projects\2021\210101045S_CON_21st Street from Mosley to I-135\00 210455 CAD\SHTS\05 Civil\Signals\210455-05-5523.dwg

CITY OF WICHITA
PUBLIC WORKS & UTILITIES ENGINEERING DIVISION

2070 SIGNAL CABINET & PAD DETAILS

TRAFFIC ENGINEER: MIKE ARMOUR, P.E. — APP'D 01/27/22

PROJECT NUMBER	ORG NUMBER	DATE
472-2021-085733	448-2021-002927	12/28/2022

CITY ENGINEER'S OFFICE
CITY HALL - SEVENTH FLOOR
455 NORTH MAIN STREET
WICHITA, KANSAS 67202-1620
(316) 268-4501

SHEET 61 OF 92

TR-106

Sh. No. 61