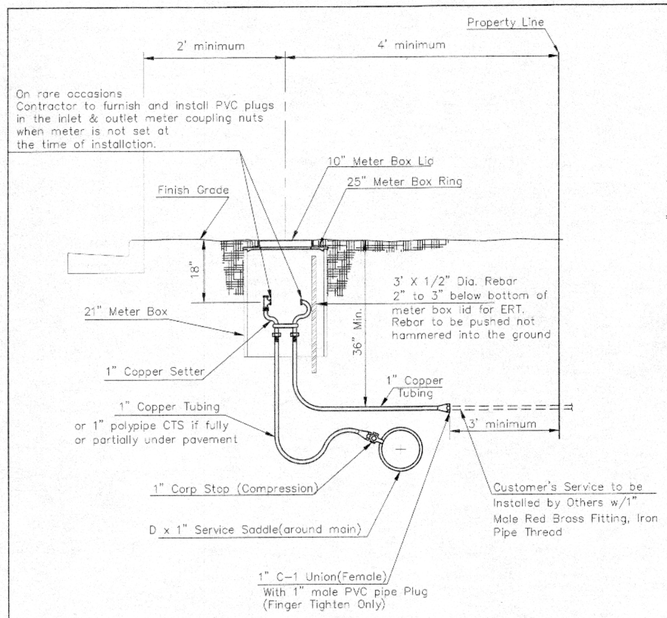

Minimum length of pigtail on consumer side is 36" of copper tubing from meter set.

Bore hole under paving shall be a maximum of 2" in diameter and a minimum of 36" below top of pavement.

Service Saddles are required on all mains.

Meter boxes will be located on each lot to be served, as indicated in the SPECIAL PROVISIONS

TYPICAL 1" METER SETTING

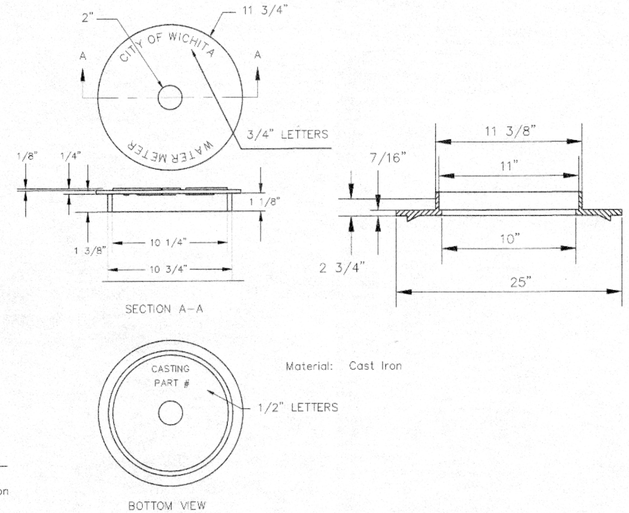

Material: Cast Iron

NOT TRAFFIC RATED RING & LID FOR 1" METER BOX

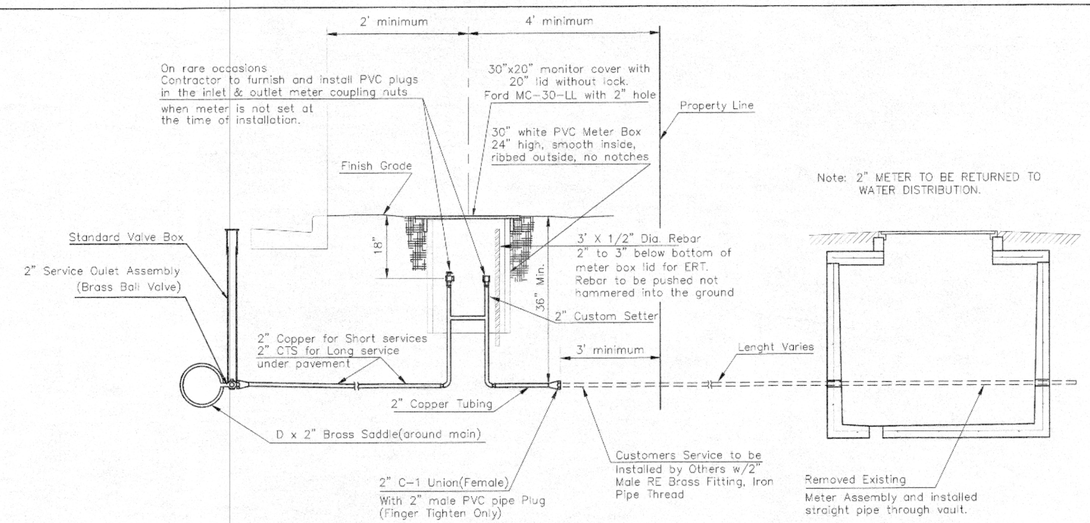

TYPICAL 2" METER SETTING

Note: ONE VALVE STEM EXTENSION FOR EACH VALVE BURIED GREATER THAN 5'.

TYPICAL 2" METER SETTING INVOLVING EXISTING 2" METER VAULT

Note: ONE VALVE STEM EXTENSION FOR EACH VALVE BURIED GREATER THAN 5'.

1 – Ø Mueller Thread Corporation Stop
– Ø Type "K" Copper Tubing
1 – Ø Copper to Iron Union (Male)
1 – Ø Brass Curb Stop (Iron to Iron)
2 – Øx4" Brass Nipple

Air Release
2 – Ø Brass Elbows (90°)
1 – 1"x6" Brass Nipple
1 – 30" Monitor Cover
1 – 20" Meter Lid

NOTE:

THE 1"/2" AIR RELEASE ASSEMBLY WILL TYPICALLY BE USED ON WATER MAINS 24" AND SMALLER, AS SPECIFICALLY DESIGNATED IN THE PLANS. COMBINATION AIR RELEASE ASSEMBLIES WILL BE SPECIFICALLY DESIGNED FOR PROJECTS WITH LARGER MAINS, AND WILL BE INCLUDED IN THE PLANS.

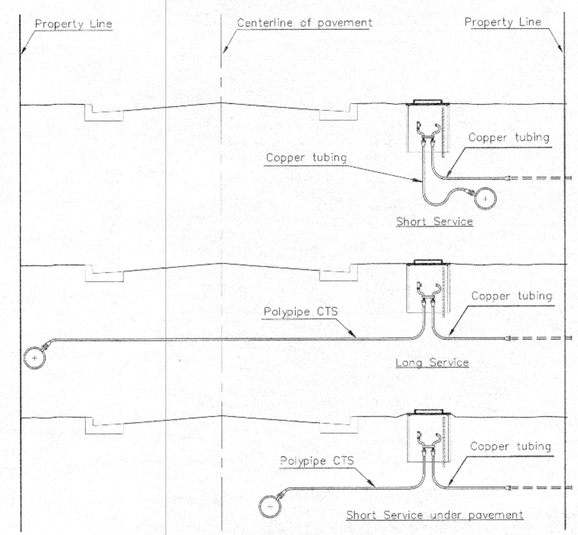

SERVICE TYPES

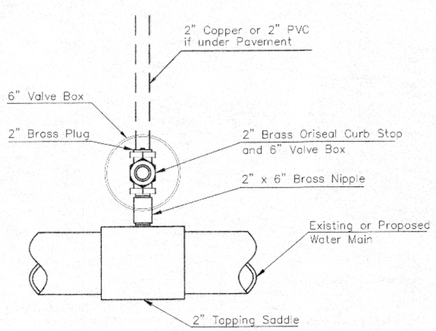

Note: Where the 2" Service Outlet Assembly is to be used to connect a 2" main to another main, the 2" valve shall be a 2" IPT Gate Valve. 2" ball or globe valves shall not be approved for this use.

2" SERVICE OUTLET ASSEMBLY

TOP VIEW

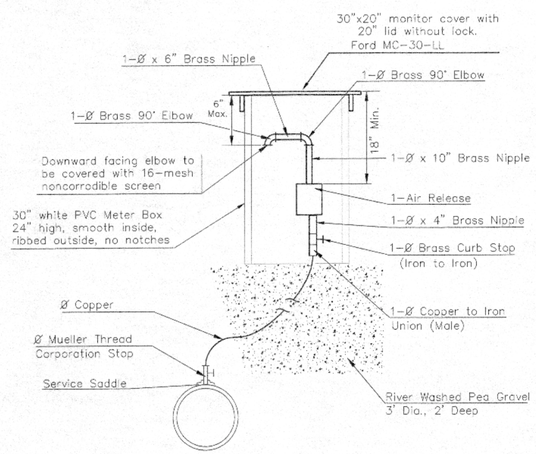

MATERIALS FOR 1" or 2" AIR RELEASE ASSEMBLY

Ø = 1" or 2"

GARY E. JANZEN LICENSED 16294 02/09/21 KANSAS PROFESSIONAL ENGINEER

REVISED: NOVEMBER 2019	TM	3'x1/2" REBAR IN 1" & 2" METER SETTINGS FOR ERT.

CITY OF WICHITA

PUBLIC WORKS & UTILITIES ENGINEERING DIVISION

STANDARD WATER SERVICE DETAIL

CITY ENGINEER

GARY JANZEN, P.E.

PROJECT NUMBER	OCA NUMBER	DATE

CITY ENGINEER'S OFFICE
CITY HALL - SEVENTH FLOOR
455 NORTH MAIN STREET
WICHITA, KANSAS 67202-1620
(316) 268-4501

SHEET 6 OF 15

WL-102