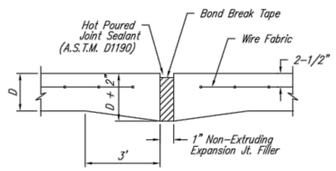

EXPANSION JOINT

NOTE: Extra Thickness to be Subsidiary to Price of Square Yards Pavement

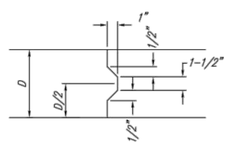

KEYWAY DETAIL

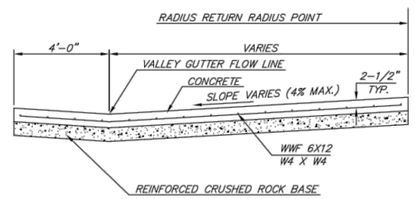

SECTION A-A

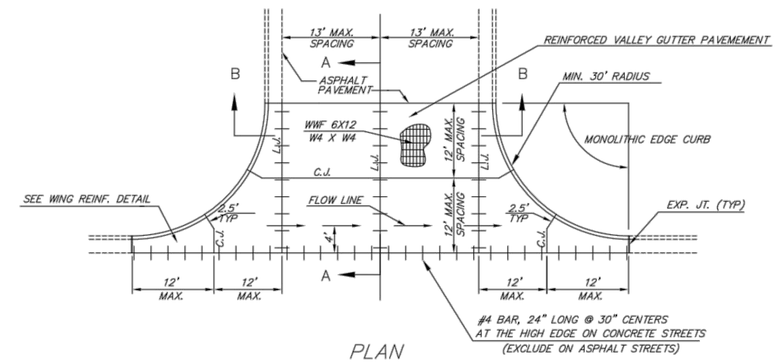

PLAN

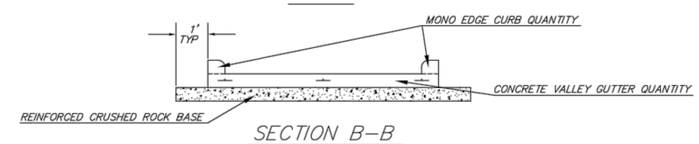

SECTION B-B

REINFORCED VALLEY GUTTER DETAIL

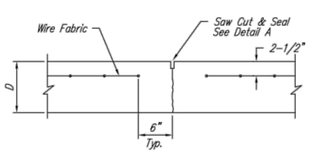

CONTRACTION JOINT DETAIL (C.J.)

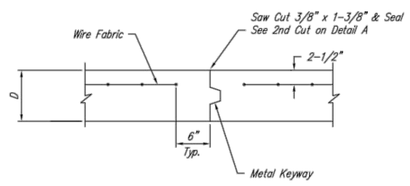

OPTIONAL CONTRACTION JOINT

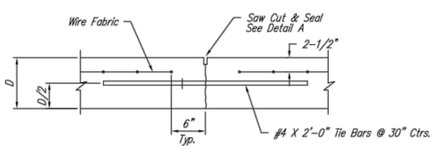

LONGITUDINAL JOINT DETAIL (L.J.)

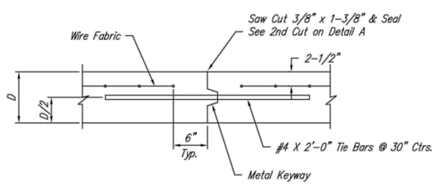

OPTIONAL LONGITUDINAL JOINT DETAIL (L.J.)

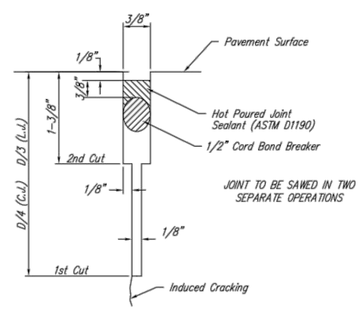

SAW JOINT DETAIL

(DETAIL A)

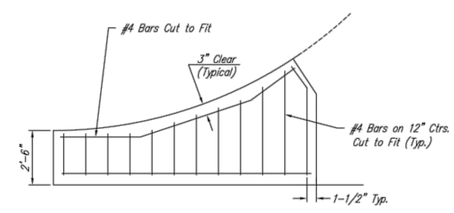

WING REINFORCING DETAIL

REVISION MAY 2017	SECTION B-B, ROCK EXTENDED ONE FOOT BEYOND PAVEMENT

CITY OF WICHITA
PUBLIC WORKS & UTILITIES ENGINEERING DIVISION

VALLEY GUTTER DETAILS

CITY ENGINEER
GARY JANZEN, P.E.

PROJECT NUMBER	OCA NUMBER	DATE

CITY ENGINEER'S OFFICE
CITY HALL - SEVENTH FLOOR
455 NORTH MAIN STREET
WICHITA, KANSAS 67202-1620
(316) 268-4501

SHEET

PV-109

REV	DATE	DESCRIPTION	DSN	DWN	CHK
2	06/07/23	ADDENDUM UPDATE	LDO	CS	
1	05/16/23	ADDENDUM NO. 1	LDO	JML	
0	03/21/23	INITIAL ISSUE	SRB	CC	

LEON D. OSBOURN
LICENSED
9772
6-7-23
KANSAS
PROFESSIONAL ENGINEER

LEON D. OSBOURN
ENGINEER
KS # 9772

200 N. EMPORIA, SUITE 100
WICHITA, KANSAS 67202
PH: (316) 440-4304
wb@kveng.com | www.kveng.com
KAW VALLEY ENGINEERING

KAW VALLEY ENGINEERING, INC. IS AUTHORIZED TO OFFER ENGINEERING SERVICES BY KANSAS STATE CERTIFICATE OF AUTHORIZATION # E-113. EXPIRES 12/31/24

SYCAMORE POND ADDITION
W 50TH STREET S & SYCAMORE AVE
WICHITA, KANSAS

PHASE 3 - PAVEMENT IMPROVEMENTS
VALLEY GUTTER DETAILS

PROJ. NO.	
G22_2295	
DESIGNER: SRB	DRAWN BY: CC
CFN: 2295PDET	
SHEET: 17	REV: 2

THIS DRAWING SHALL NOT BE UTILIZED BY ANY PERSON, FIRM, OR CORPORATION IN WHOLE OR IN PART WITHOUT THE SPECIFIC PERMISSION OF KAW VALLEY ENGINEERING, INC.