STATE	PROJECT NO.	YEAR	SHEET NO.	TOTAL SHEETS
KANSAS	87 U 2386-01	2023	16	18

SIGN LAYOUT INFORMATION

KG20-2

Std. Size Expwy/Freeway
6" C
48"x 24"

KG20-5

Std. Size Expwy/Freeway
6" C
48"x 24"

KM4-2O

Std. Size
3" C
24"x 6"

Expwy/Freeway
6" C
48"x 12"

W7-3a

Mileage to be Determined by the Engineer.

W8-15

Std. Size Expwy/Freeway
8" D
48"x 48"

W8-7

Std. Size Expwy/Freeway
8" D
48"x 48"

W8-15p

Std. Size Expwy/Freeway
30"x 24"

W8-17

Std. Size Expwy/Freeway
48"x 48"

W8-11

Std. Size Expwy/Freeway
8" D
48"x 48"

W8-17P
(Optional)

Std. Size Expwy/Freeway
30"x 24"

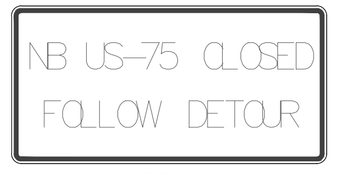

SP-01
(Special Sign)

Std. Size
6" C

Expwy/Freeway
10" D

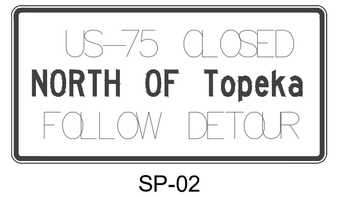

SP-02
(Special Sign)

	Std. Size	Expwy/Freeway
Uppercase:	6" C	10" D
Lowercase:	4.5" C	8" D

All city names and street names on special signs and destination signs must have upper and lower case letters.

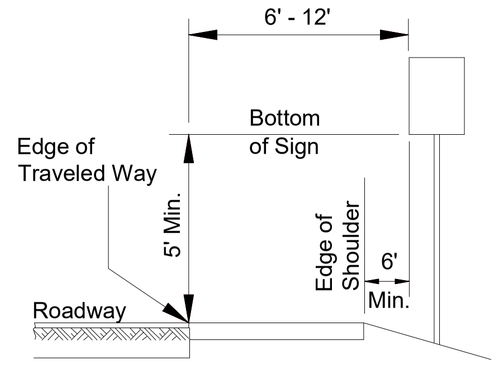

RURAL

1) Ground-mounted signs shall be mounted at a minimum height of 5' measured from the bottom of sign to the near edge of the pavement.

2) Large signs having an area exceeding 50 square feet installed on multiple breakaway posts shall be mounted a minimum of 7' above the ground.

3) The height of the secondary sign mounted below another sign may be 4' measured from the bottom of the sign to the near edge of the pavement. Signs shall not overlap each other.

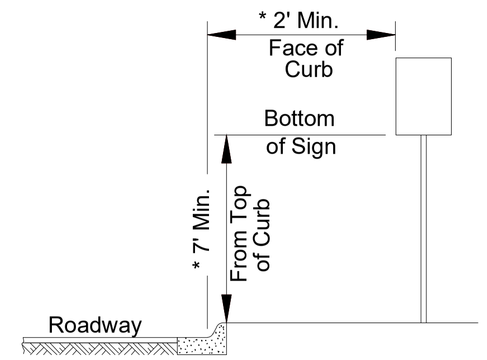

URBAN

1) Signs shall be mounted at a minimum height of 7' measured from the bottom of sign to the near edge of the pavement.

2) Neither portable nor permanent sign supports should be located on sidewalks or areas designated for pedestrian or bicycle traffic.

3) Signs mounted lower than 7' should not project more than 4" into pedestrian facilities.

4) The height from of the secondary sign mounted below another sign may be 6' measured from the bottom of sign to the near edge of the pavement. Signs shall not overlap each other.

5) Large signs having an area exceeding 50 square feet installed on multiple breakaway posts shall be mounted a minimum of 7' above the ground.

* 6) Pedestrian detour signing shall be a minimum of 2' measured from the top of the pedestrian pathway to the bottom of the sign and shall not protrude into the walkway nor shall it project beyond the back of curb.

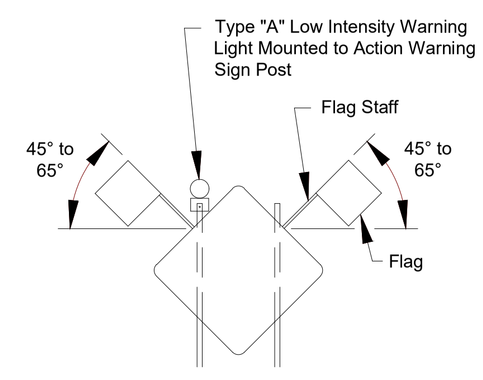

When the sign width is equal to or greater than 9', three or more wood posts may be used with a minimum of 4' between the centerline of each post. All signs less than 9' in width shall use a maximum of two wood posts.

In the case of hitting rock when driving posts
1. Shift the sign location. Do not violate minimum sign spacing.
2. With the engineer's approval, use acceptable alternative sign stands.

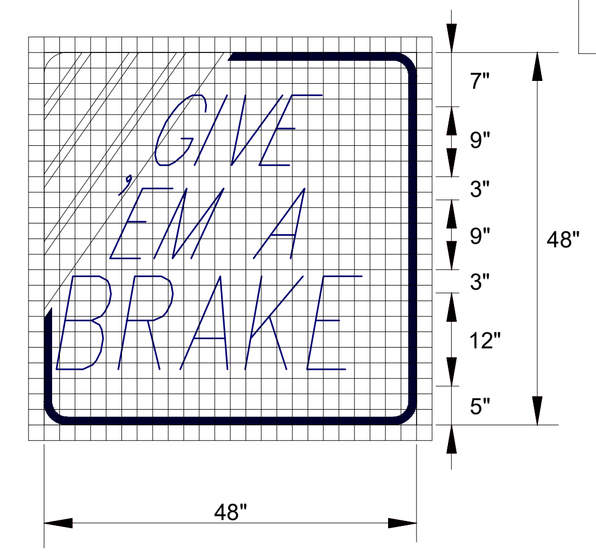

KI-104a

Sign Number	GIVE EM A BRAKE
Width x Height	4'-0" x 4'-0"
Border Width	1.0"
Corner Radius	4.0"
Stripe Width	3.0"
Mounting	Ground
Background	Type: Non-Reflective
	Color: Black
Legend/Border	Type: Reflective
	Color: White
Legend Font	Dutch 801 Roman SWC 25 Degree Slant
Stripes	Type: Reflective
	Color: Orange

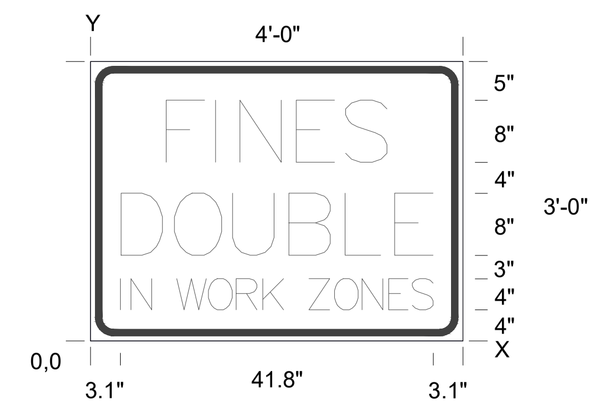

KI-105a

Sign Number	FINES DOUBLE
Width x Height	4'-0" x 3'-0"
Border Width	0.9"
Corner Radius	3.0"
Mounting	Ground
Background	Type: Reflective
	Color: White
Legend/Border	Type: Non-Reflective
	Color: Black

Dimensions in inches

Spacings are to start of next letter

LETTER SPACINGS

Y FONT		F	I	N	E	S										HT LEN
23.0 D																8.0
	9.7	6.4	3.2	7.3	6.4	5.4	9.7									28.6
11.0 D		D	O	U	B	L	E									8.0
	3.9	6.9	7.5	7.3	7.3	6.4	4.9	3.9								40.3
4.0 D		I	N		W	O	R	K		Z	O	N	E	S		4.0
	3.1	1.6	2.7	3.2	4.3	3.8	3.6	2.8	3.2	3.4	3.8	3.6	3.2	2.7	3.1	41.8

Notes:

Typically, there are two sets of informational signs installed per project: one for each direction of traffic.

Install signs a minimum of 500' in advance of the road work ahead sign. The engineer may designate a more appropriate location if conditions dictate.

The informational signs are not to interfere with the traffic control signs for the project.

NO.	DATE	REVISIONS	BY	APP'D

KANSAS DEPARTMENT OF TRANSPORTATION

TRAFFIC CONTROL
SIGN INFORMATION

TE710

FHWA APPROVAL			06-01-15	APP'D.		Kristina Ericksen	
DESIGNED	R.W.B.	DETAILED	R.W.B.	QUANTITIES		TRACED	
DESIGN CK.		DETAIL CK.		QUAN.CK.		TRACE CK.	

KDOT Graphics Certified 12-16-2022 Sh. No. 16

KDOT Graphics Certified

Drawn By : $$USERNAME$$ Plotted : $$$$$$SYTIME$$$$$$$$
File : $$$$$$$$$