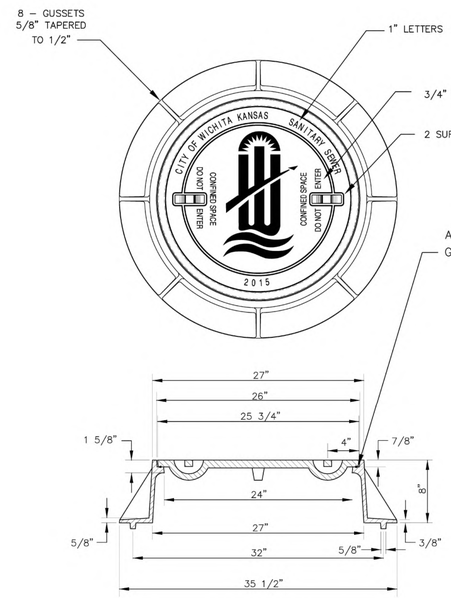

STANDARD MANHOLE FRAME & COVER

DEETER #1261 OR EJIW #1936–Z1

NOTE:

1. FURNISHED WITH MACHINED HORIZONTAL BEARING SURFACE.

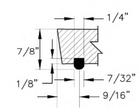

O–RING DETAIL

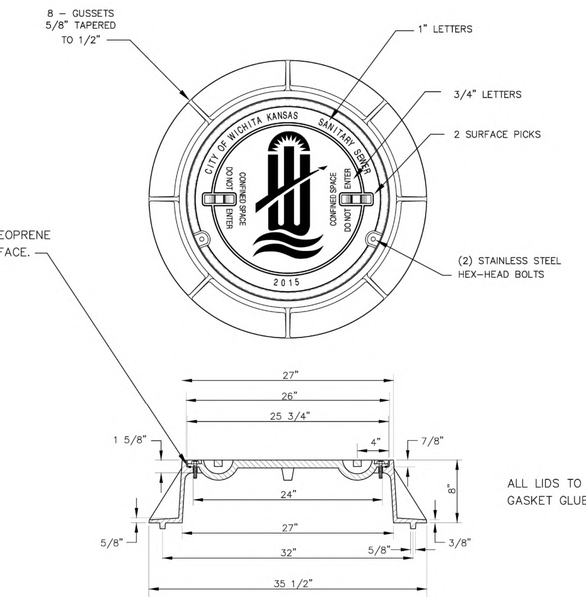

BOLT DOWN MANHOLE FRAME & COVER

DEETER #1261 OR EJIW #1936–Z1

NOTE:

1. FURNISHED WITH MACHINED HORIZONTAL BEARING SURFACE.

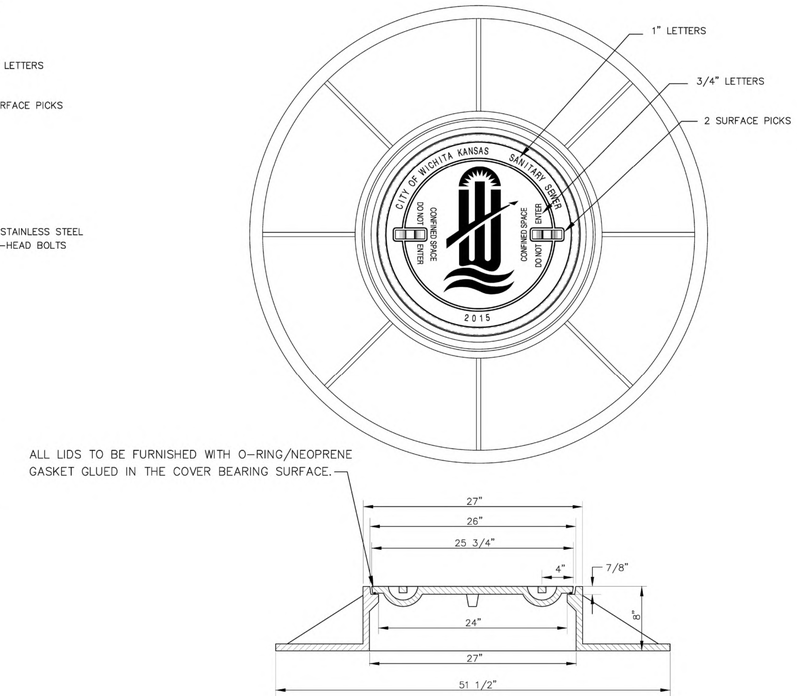

WIDE FLANGED FRAME & COVER

DEETER #1261A

NOTE:

1. FURNISHED WITH MACHINED HORIZONTAL BEARING SURFACE.

GENERAL NOTES

1. MANHOLE CASTINGS SHALL BE MANUFACTURED USING GOOD QUALITY GRAY IRON CONFORMING TO CLASS 30 OF A.S.T.M. DESIGNATION A–48. DIMENSIONS SHOWN ON THE DETAILED DRAWINGS SHALL BE CONSIDERED AS MINIMUM REQUIREMENTS AND ANY DEVIATIONS FROM THE DIMENSIONS SHOWN MUST BE SPECIFICALLY APPROVED. THE FINISHED CASTINGS SHALL BE OF UNIFORM QUALITY, FREE FROM BLOWHOLES, POROSITY, HARD SPOTS, SHRINKAGE DISTORTIONS OR OTHER DEFECTS.

2. MANHOLE CASTINGS SHALL BE MANUFACTURED SUCH THAT A COVER MANUFACTURED BY ANY ONE FOUNDARY WILL FIT INTERCHANGEABLY INTO A FRAME MANUFACTURED BY ANOTHER FOUNDRY AND STILL MEET ALLOWABLE CLEARANCES AND NON–ROCKING REQUIREMENTS. THIS WILL REQUIRE MANUFACTURING OF THE MATCHING FACES ON THE COVER AND THE FRAME TO CLOSE TOLERANCES.

3. THE OUTSIDE CIRCUMFERENCE OF THE VERTICAL FACE OF THE COVER AND THE INSIDE CIRCUMFERENCE OF THE VERTICAL FACE IN THE FRAME RECESS SHALL BE MANUFACTURED TO TOLERANCES SUCH THAT THE CLEARANCE BETWEEN THE COVER AND FRAME WILL NOT EXCEED 1/8" AT ANY POINT AROUND THE CIRCUMFERENCE OF THE COVER. THE SEATING SURFACES BETWEEN THE COVER AND FRAME SHALL BE MACHINED SUCH THAT THESE SEATING SURFACES SHALL MAKE FULL CONTACT FOR THEIR FULL CIRCUM–FERENCE TO PRECLUDE THE COVER FROM ROCKING IN THE FRAME.

4. THE MANHOLE FRAME AND COVER SHALL BE MARKED WITH LETTERING INDICATING THE NAME OF THE MANUFACTURER AND THE YEAR WHEN THE COVER OR FRAME WAS CAST. THE COVER SHALL BE FURTHER IDENTIFIED WITH REGARDS TO OWNERSHIP USING LETTERS AT LEAST 1"IIN HEIGHT. THIS IDENTIFICATION SHALL BE "CITY OF WICHITA SANITARY SEWER".
THE TOP SURFACE OF THE COVER SHALL BE MANUFACTURED IN WITH CITY OF WICHITA DESIGN AS INDICATED ON THE DRAWINGS. SMOOTH BLOCKOUTS SHALL BE UTILIZED TO HIGHLIGHT THE LETTERING ON THE COVER SURFACE. THE TOTAL AREA OF SMOOTH SURFACE BLOCKOUT SHALL NOT EXCEED THE AREA AS INDICATED ON THE DRAWING. POSITIONING OF SMOOTH BLOCKOUTS AND LETTERING MAY VARY FROM THAT SHOWN ON THE DETAILED DRAWING.

REVISED: MARCH 2016

CITY OF WICHITA
PUBLIC WORKS & UTILITIES
ENGINEERING DIVISION

MANHOLE
FRAME AND COVER
(SANITARY SEWER)

CITY ENGINEER
GARY JANZEN, P.E

PROJECT NUMBER	OCA NUMBER	DATE

CITY ENGINEER'S OFFICE
CITY HALL - SEVENTH FLOOR
455 NORTH MAIN STREET
WICHITA, KANSAS 67202-1620
(316) 268-4501

SHEET

REV.	DESCRIPTION	DATE

MPK ADDITION

SANITARY SEWER
IMPROVEMENTS

SE $\frac{1}{4}$ of the SE $\frac{1}{4}$, S18-T28S-R1E
WICHITA, SEDGWICK COUNTY, KS

CERTIFIED ENGINEERING DESIGN, P.A.
CIVIL ENGINEERING SERVICES

1935 WEST MAPLE STREET
WICHITA, KANSAS 67213
PH.(316)262-8808 FAX.(316)262-1669

PERMIT SET
NOT FOR CONSTRUCTION

PROJECT NO.: 20223184
ISSUE DATE: 6/16/2023
CONTACT: L. MILLS
CHECKED BY: L. MILLS

MANHOLE FRAME & COVER DETAILS

FILE LOCATION: C:\Users\User2\OneDrive - CED\Projects\2023\20223025\DWG\Sanitary.dwg TAB NAME: Detail 2 USER: User2 SAVED: 6/18/2023 10:49 PM PLOTTED: 6/18/2023 10:49 PM