STATE	PROJECT NO.	YEAR	SHEET NO.	TOTAL SHEETS
KANSAS	CED PROJECT NO.: 20051279	2006	11	17

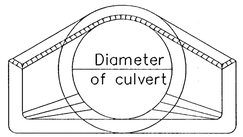

END ELEVATION (TYPE I)

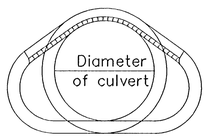

SECTION A–A
Showing rounding of inside edge of end section.

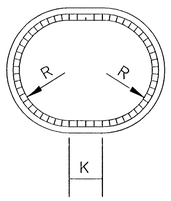

END ELEVATION
(TYPE III)

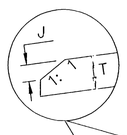

Lineal Feet of Pipe Shown on Plans (Pay Length)

Horizontal Roadway Lt. | Horizontal Roadway Rt.

Length of Pipe Lt. | Length of Pipe Rt.

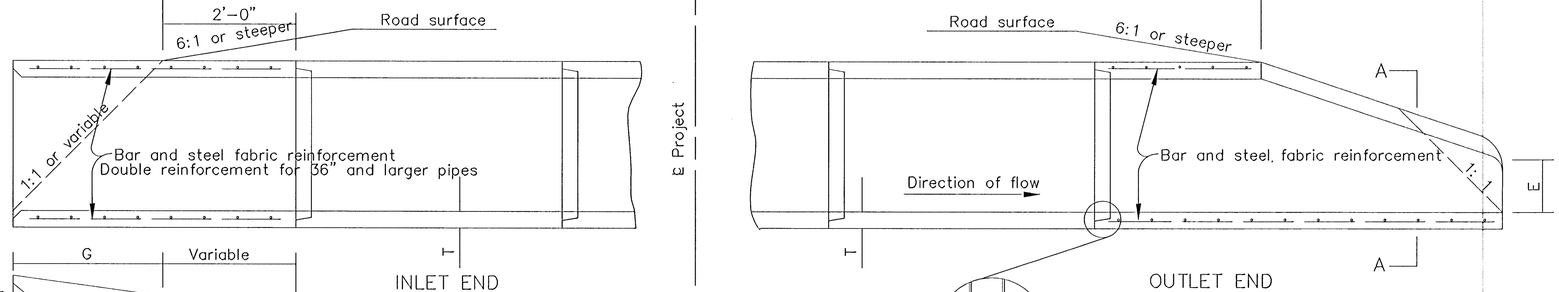

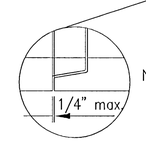

Note: Gain in length due to joint fit tolerance will not be paid for.

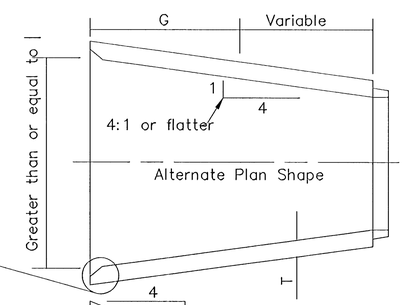

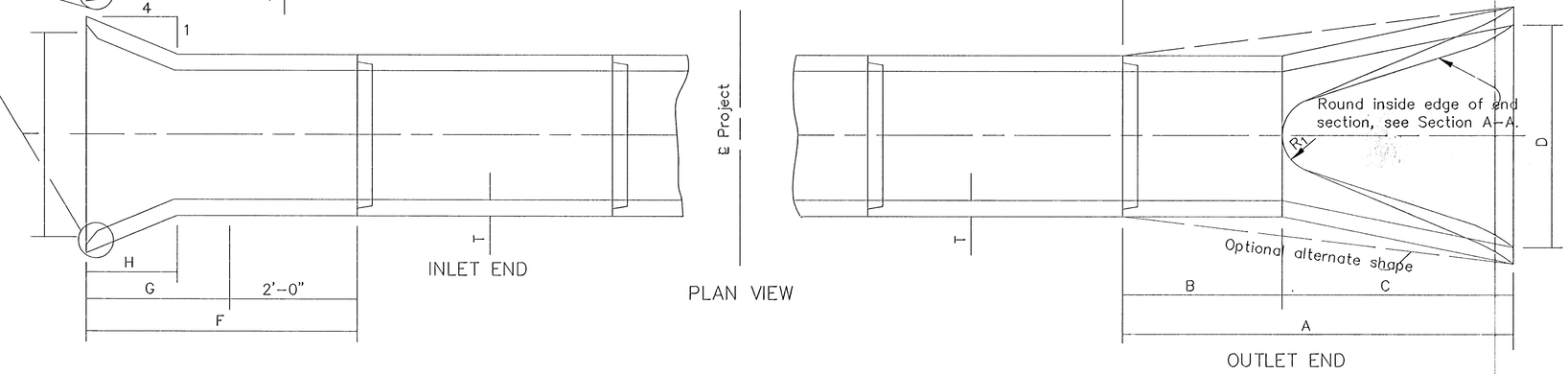

ø Transition to round pipe.
Paid for as separate item of End Section, except when structures shall bid as alternates. In that case End Sections shall be subsidiary to bid item. Drainage Structure No. .
Included in pay length of pipe.
Minimum waterway area is calculated at the inside of the bevel.

END SECTION (TYPE I) NOMINAL DIMENSIONS

Diam.	A	B	C	D	E	R_1	Slope	T
12"	6'–0⅞"	4'–0⅞"	2'–0"	2'–0"	4"	9	3: 1	2"
15"	6'–1"	3'–10"	2'–3"	2'–6"	6"	11	3: 1	2¼"
18"	6'–1"	3'–10"	2'–3"	3'–0"	9"	12	3: 1	2½"
24"	6'–1½"	2'–6"	3'–7½"	4'–0"	9½"	14	3: 1	3"
30"	6'–1¾"	1'–7¾"	4'–6"	5'–0"	1'–0"	15	3: 1	3½"
36"	8'–1¾"	2'–10¾"	5'–3"	6'–0"	1'–3"	20	3: 1	4"
42"	8'–2"	2'–11"	5'–3"	6'–6"	1'–9"	22	3: 1	4½"
48"	8'–2"	2'–2"	6'–0"	7'–0"	2'–0"	22	3: 1	5"
54"	8'–2¼"	2'–9¼"	5'–5"	7'–6"	2'–3"	24	2.4 : 1	5½"
60"	8'–3"	3'–3"	5'–0"	8'–0"	2'–11"	24	2 : 1	6"
72"	8'–3"	1'–9"	6'–6"	9'–0"	3'–0"	24	1.86 : 1	7"
84"	9'–3½"	1'–9"	7'–6½"	10–0"	3'–0"	24	1.6 : 1	8"

SIDE TAPERED INLET SECTION (TYPE III)–NOMINAL DIMENSIONS

Diam.	Min. W.W. Area Sq.Ft.	F	G	H	I	J	K	R	T
24"	4.5	4'–3"	2'–3"	1'–5⅛"	2'–8"	1½"	8"	1'–0"	3"
30"	7.0	4'–9½"	2'–9½"	1'–9½"	3'–4"	2"	10"	1'–3"	3½"
36"	10.1	5'–4"	3'–4"	2'–1½"	4'–0"	2"	1'–0"	1'–6"	4"
42"	13.7	5'–10½"	3'–10½"	2'–5⅞"	4'–8"	2½"	1'–2"	1'–9"	4½"
48"	17.9	6'–5"	4'–5"	2'–10⅛"	5'–4"	3"	1'–4"	2'–0"	5"
54"	22.7	6'–11½"	4'–11½"	3'–2½"	6'–0"	3½"	1'–6"	2'–3"	5½"
60"	28.0	7'–6"	5'–6"	3'–6⅞"	6'–8"	4"	1'–8"	2'–6"	6"
72"	40.3	8'–7"	6'–7"	4'–3⅝"	8'–0"	5"	2'–0"	3'–0"	7"
84"	54.8	9'–8"	7'–8"	5'–0⅜"	9'–4"	6"	2'–4"	3'–6"	8"

Dimensions for alternate shapes shall be equal to or greater than those shown in the table, unless otherwise shown.

END SECTION SUMMARY

Station	Location	Type	Size	Crown Grade Elev.	Flow line		Horizontal Roadway		Degree of Rotation	Length of Pipe		Lin.Ft. of Pipe	End Sections			
													Type I		Type III	
					LT.	RT.	LT.	RT.		LT.	RT.		LT.	RT.	LT.	RT.

NO.	DATE	REVISIONS	BY	APP'D

KANSAS DEPARTMENT OF TRANSPORTATION
CONCRETE END SECTIONS
FOR CONCRETE PIPES
TYPE I & SIDE TAPERED
INLET SECTION (TYPE III)

RD662

FHWA APPROVAL	1– 6–92	APP'D. James O. Brewer	
DESIGNED	DETAILED	QUANTITIES	TRACED BOWSER
DESIGN CK.	DETAIL CK.	QUAN.CK.	TRACE CK. SEITZ

Note: The culverts listed on this sheet may or may not indicate that the culvert installed will be reinforced concrete, steel, or aluminum.