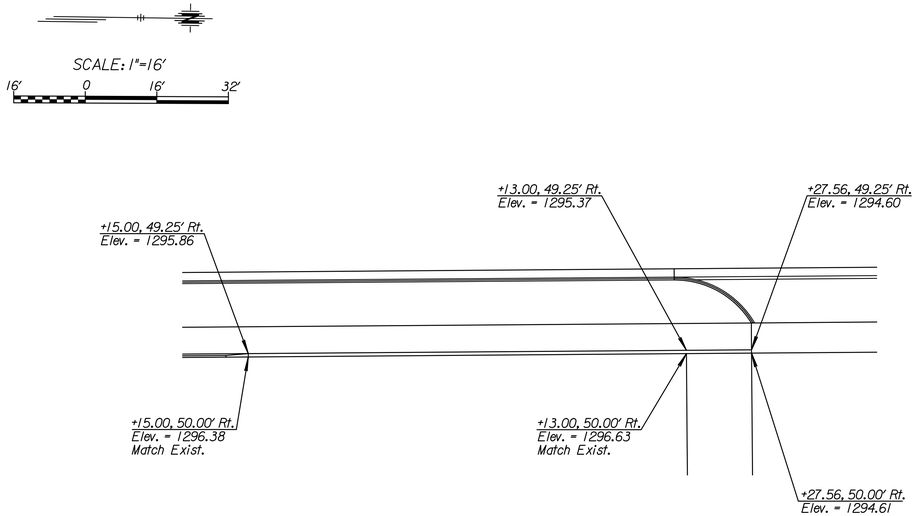

RETAINING WALL DETAILS
STA. 119+15.00 TO STA. 120+27.56, RT.

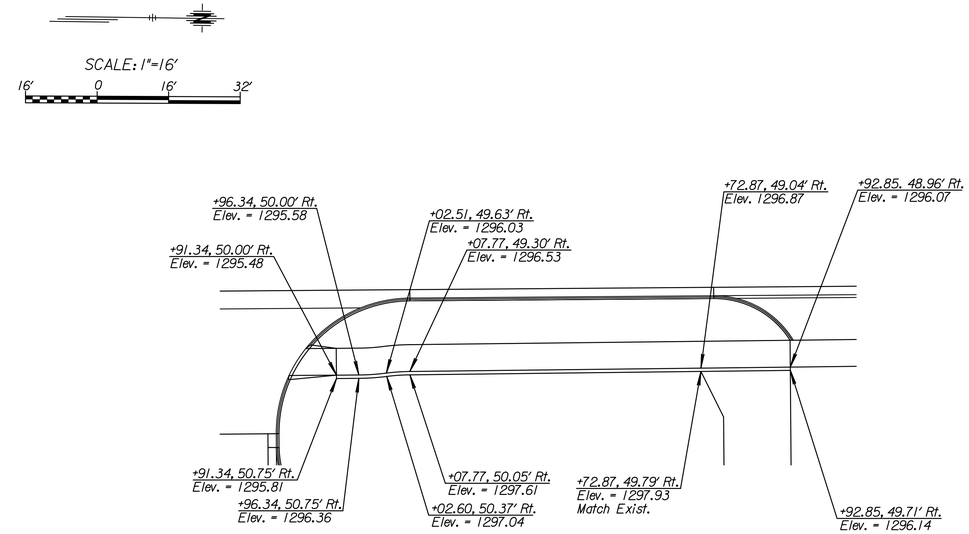

RETAINING WALL DETAILS
STA. 123+91.34 TO STA. 124+92.85, RT.

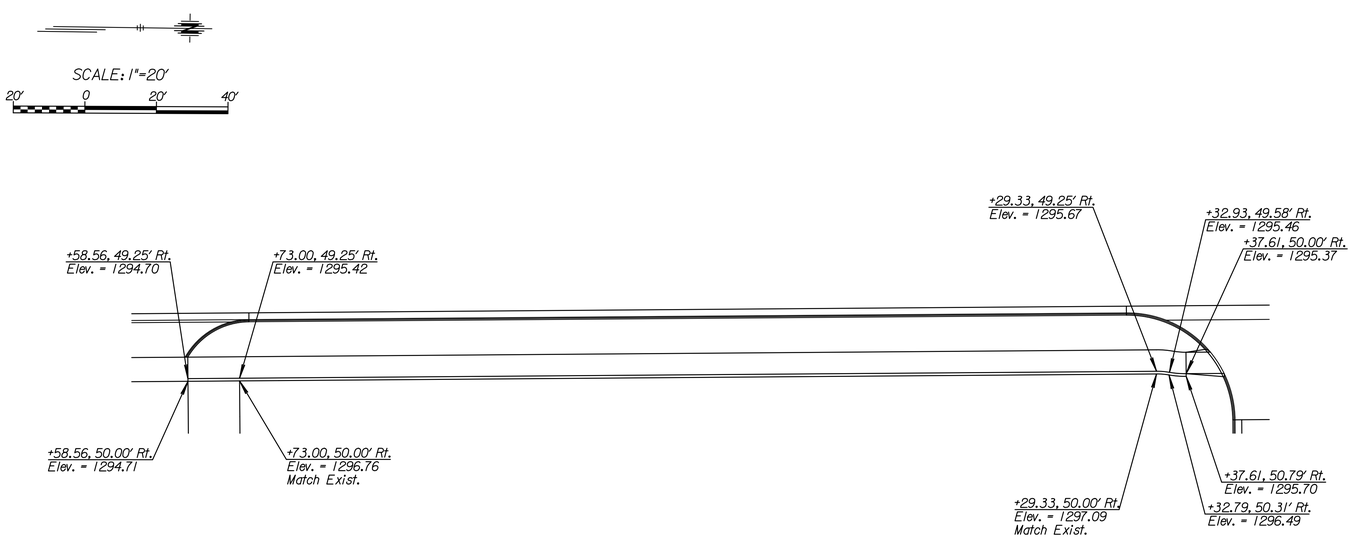

RETAINING WALL DETAILS
STA. 120+58.56 TO STA. 123+37.61, RT.

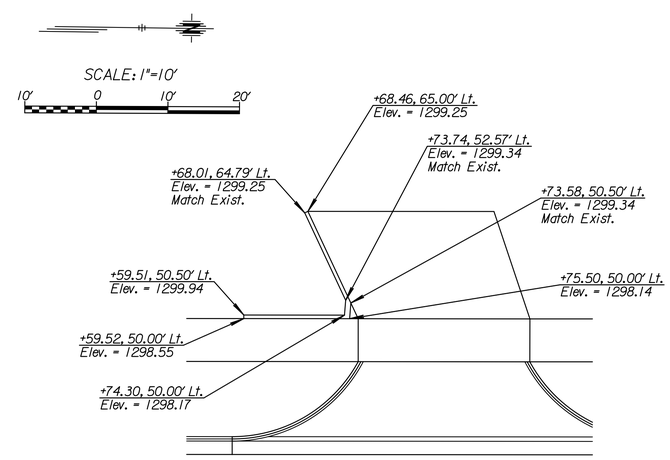

RETAINING WALL DETAILS
STA. 137+59.51 TO STA. 137+68.01, LT.

TRANSYSTEMS
245 N. WACO
SUITE 222
WICHITA, KANSAS 67202
MAIN: 316-303-3000
FAX: 316-462-5629

CONSULTANTS:

WEST STREET IMPROVEMENTS
FROM PAWNEE TO HARRY

WICHITA, KANSAS

CITY OF WICHITA

REVISIONS:

MARK	DATE	DESCRIPTION

PROJ NO: 87 N-0720-01
SCALE: NTS
DATE: 9/25/2023
DESIGNED BY: LCV
DRAWN BY: LCV
CHECKED BY:MDB

SHEET TITLE:

RETAINING WALL DETAILS

SHEET NO.
130
SHEET 130 OF 517

CADconform Certify This File

IF THIS DRAWING IS LESS THAN 22" X 36" IT IS A REDUCED SIZE DRAWING

CADconform Certify This File

lcvohs
9/25/2023 - 6:26:13 PM - c:\transystems\pw_local\transyscorp-pw1\a-e_lcvohs\d0984549\C-DET-RET-502.dgn