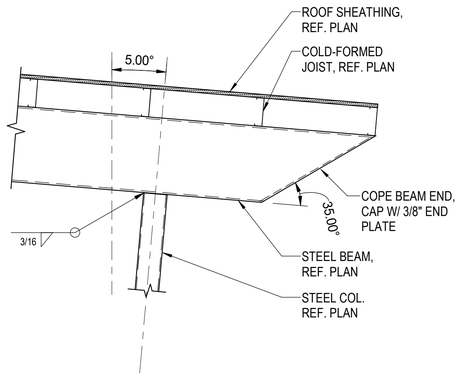

1 ROOF FRAMING DETAIL

3/4" = 1'-0"

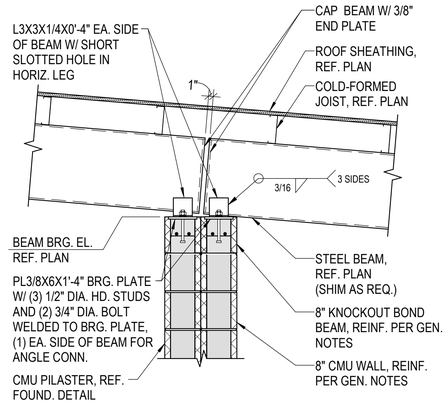

2 ROOF FRAMING DETAIL

3/4" = 1'-0"

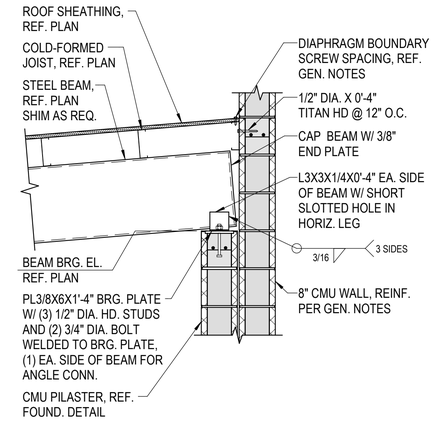

3 ROOF FRAMING DETAIL

3/4" = 1'-0"

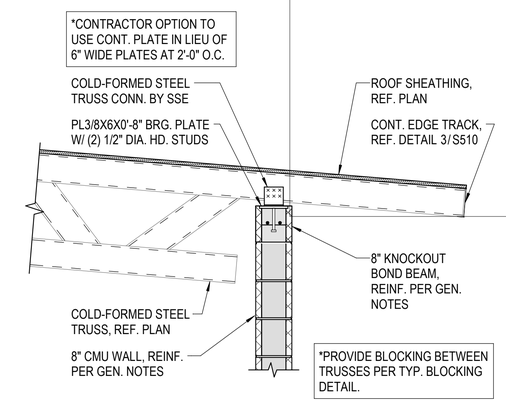

4 ROOF FRAMING DETAIL

3/4" = 1'-0"

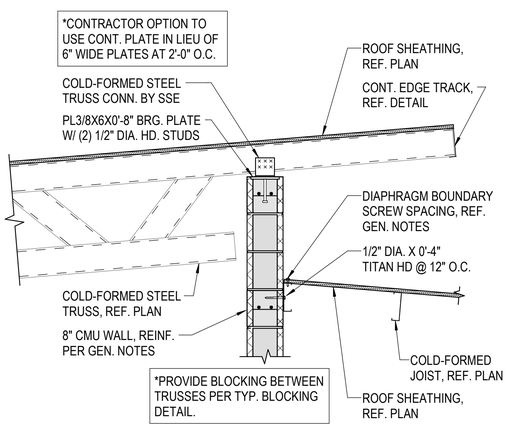

5 ROOF FRAMING DETAIL

3/4" = 1'-0"

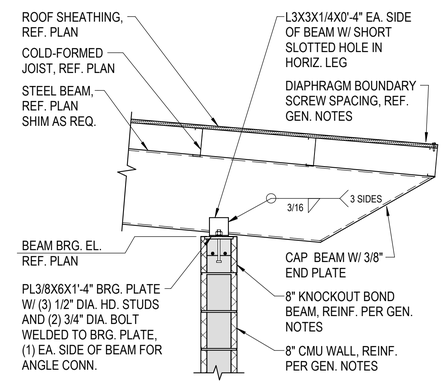

6 ROOF FRAMING DETAIL

3/4" = 1'-0"

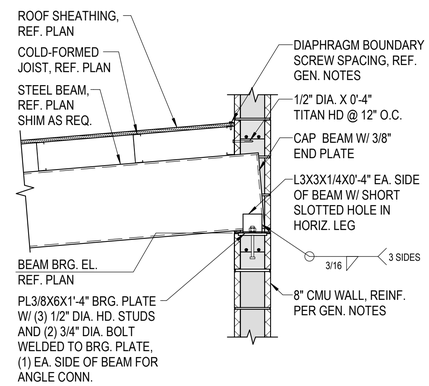

7 ROOF FRAMING DETAIL

3/4" = 1'-0"

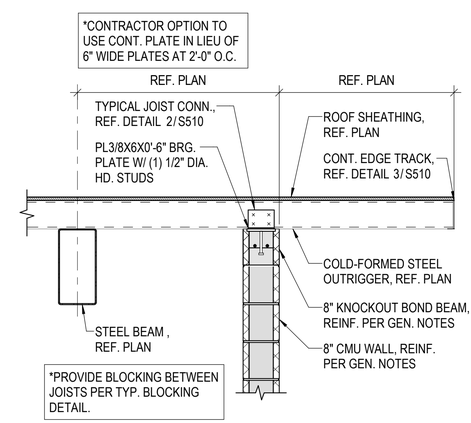

8 ROOF FRAMING DETAIL

3/4" = 1'-0"

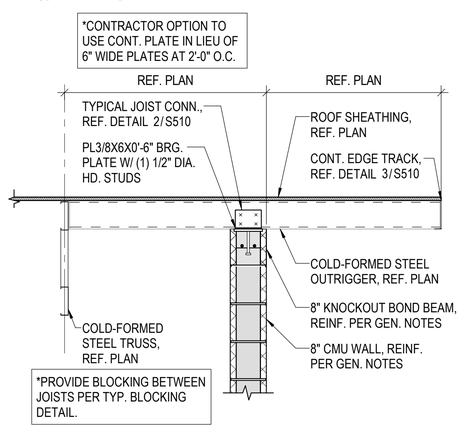

9 ROOF FRAMING DETAIL

3/4" = 1'-0"

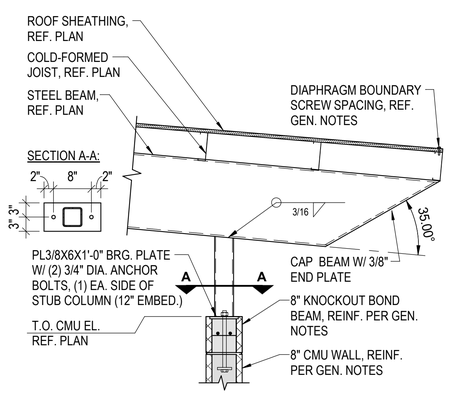

10 ROOF FRAMING DETAIL

3/4" = 1'-0"

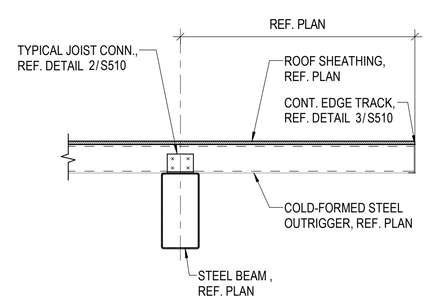

11 ROOF FRAMING DETAIL

3/4" = 1'-0"

PEC
PROFESSIONAL ENGINEERING CONSULTANTS
303 SOUTH TOPEKA
WICHITA, KS 67202
316-262-2691 www.pec1.com

CITY OF WICHITA

RYAN S. TAYLOR LICENSED 28617 10/18/2023 KANSAS PROFESSIONAL ENGINEER

SOUTH LAKES SPORTS PARK
WICHITA, KS

Issue:		
	100% PLANS	10/18/23

JOB NO.	220008-003
DATE	18 OCTOBER 2023
PM	NLS
DESIGNED BY	RST
DRAWN BY	RST
CHECKED BY	WAG

FRAMING DETAILS

S511

10/18/2023 4:09:54 PM
Autodesk Docs://220008-001 - South Lakes Pickleball Complex/220008-001_STRUCT_R22.rvt