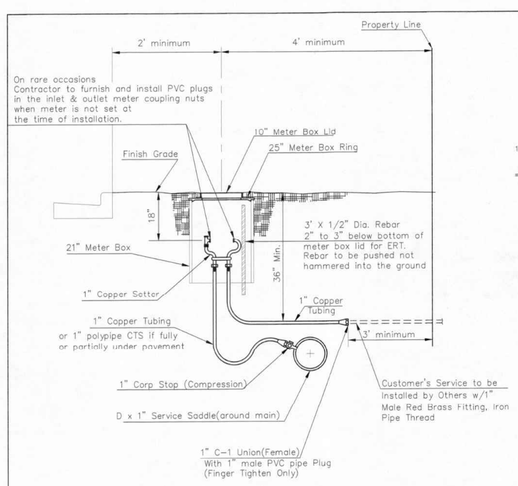

Minimum length of pigtail on consumer side is
36" of copper tubing from meter set.
Bore hole under paving shall be a maximum of 2" in diameter
and a minimum of 36" below top of pavement.
Service Saddles are required on all mains.
Meter boxes will be located on each lot to be served, as indicated
in the SPECIAL PROVISIONS

TYPICAL 1" METER SETTING

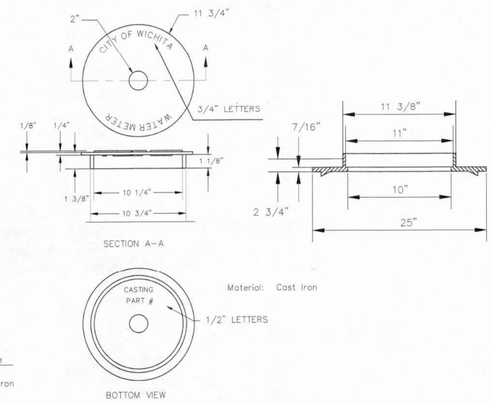

Material: Cast Iron

NOT TRAFFIC RATED
RING & LID FOR 1" METER BOX

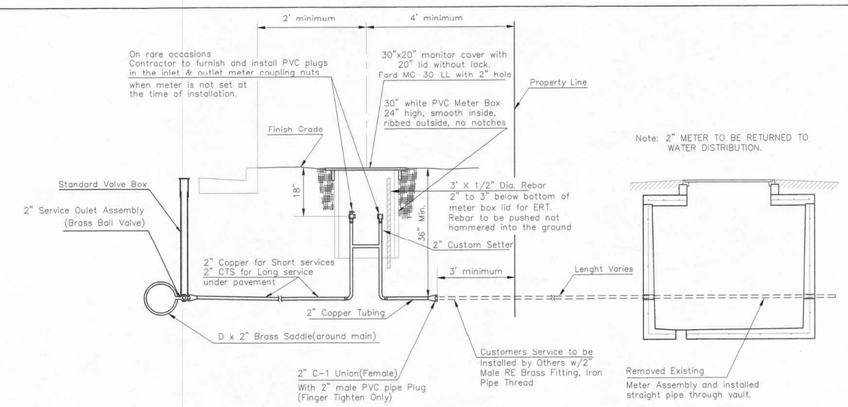

TYPICAL 2" METER SETTING

Note: ONE VALVE STEM EXTENSION FOR EACH
VALVE BURIED GREATER THAN 5'.

TYPICAL 2" METER SETTING INVOLVING EXISTING 2" METER VAULT

Note: ONE VALVE STEM EXTENSION FOR EACH
VALVE BURIED GREATER THAN 5'.

1 – Ø Mueller Thread Corporation Stop
– Ø Type "K" Copper Tubing
1 – Ø Copper to Iron Union (Male)
1 – Ø Brass Curb Stop (Iron to Iron)
2 – Øx4" Brass Nipple

Air Release
2 – Ø Brass Elbows (90°)
1 – 1"x6" Brass Nipple
1 – 30" Monitor Cover
1 – 20" Meter Lid

NOTE:

THE 1"/2" AIR RELEASE ASSEMBLY WILL TYPICALLY BE USED ON WATER MAINS 24" AND SMALLER, AS SPECIFICALLY DESIGNATED IN THE PLANS. COMBINATION AIR RELEASE ASSEMBLIES WILL BE SPECIFICALLY DESIGNED FOR PROJECTS WITH LARGER MAINS, AND WILL BE INCLUDED IN THE PLANS.

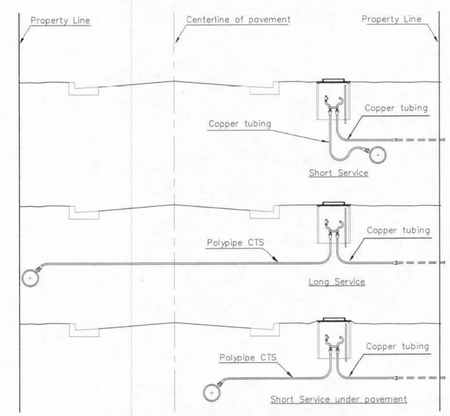

SERVICE TYPES

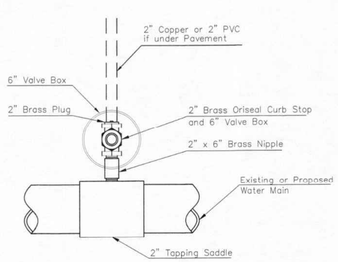

Note: Where the 2" Service Outlet Assembly is to be used to connect a 2" main to another main, the 2" valve shall be a 2" IPT Gate Valve. 2" ball or globe valves shall not be approved for this use.

2" SERVICE OUTLET ASSEMBLY

TOP VIEW

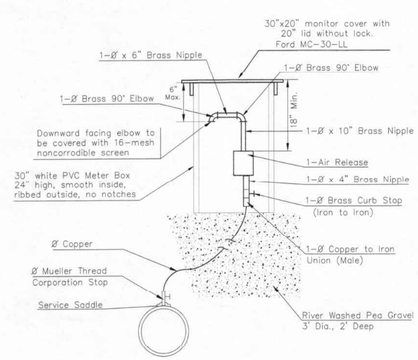

MATERIALS FOR 1" or 2" AIR RELEASE ASSEMBLY
Ø = 1" or 2"

REVISED: NOVEMBER 2019	TM	3'x1/2" REBAR IN 1" & 2" METER SETTINGS FOR ERT.

CITY OF WICHITA
PUBLIC WORKS & UTILITIES
ENGINEERING DIVISION

STANDARD
WATER SERVICE
DETAIL

CITY ENGINEER
GARY JANZEN, P.E.

PROJECT NUMBER	OCA NUMBER	DATE

CITY ENGINEER'S OFFICE
CITY HALL - SEVENTH FLOOR
455 NORTH MAIN STREET
WICHITA, KANSAS 67202-1620
(316) 268-4501

SHEET
_ of _

WL-102

PEC
PROFESSIONAL ENGINEERING CONSULTANTS
303 SOUTH TOPEKA
WICHITA, KS 67202
316-262-2691 www.pec1.com

CITY OF WICHITA

WATERLINE IMPROVEMENTS
TO SERVE
CYPRESS GLEN ADDITION

PAUL GUNZELMAN, P.E. - CITY ENGINEER
CITY OF WICHITA PROJECT NO. 448-2023-016042

JOB NO.	210975-007
DATE	SEPTEMBER 2023
PM	GAS
DESIGNED BY	SNW
DRAWN BY	AJH
CHECKED BY	GAS

STANDARD WATER SERVICE DETAIL

CU-503
14 OF 21

SAVED 5/26/2023 4:39:35 PM BY ARIC.HERMANN
PLOTTED 10/12/2023 10:09:45 AM BY KURTIS DEKAT
U:\WICHITA-CIVIL\2021\210975\007\PEC\DRAWINGS\210975-007-CU-503.DWG