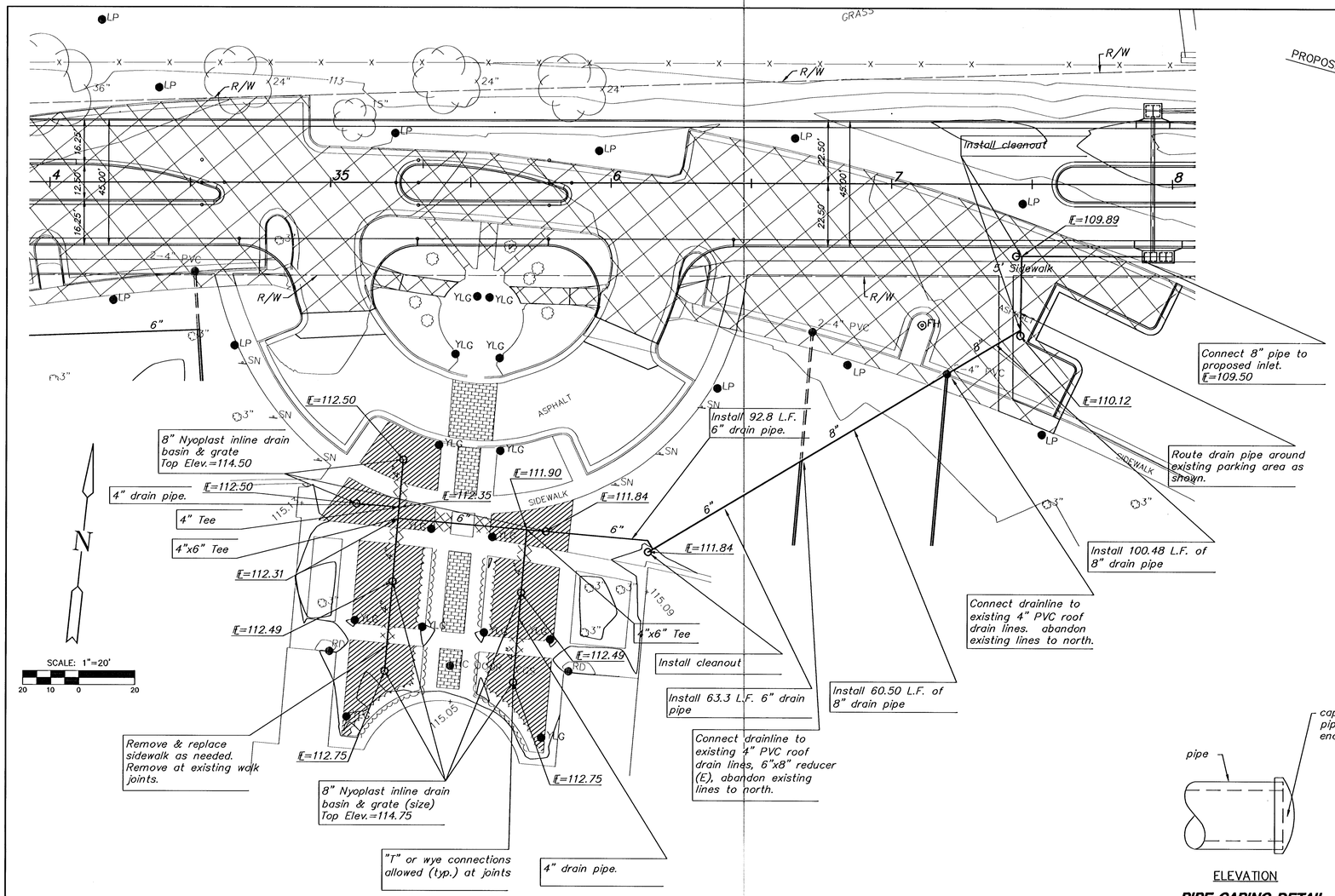

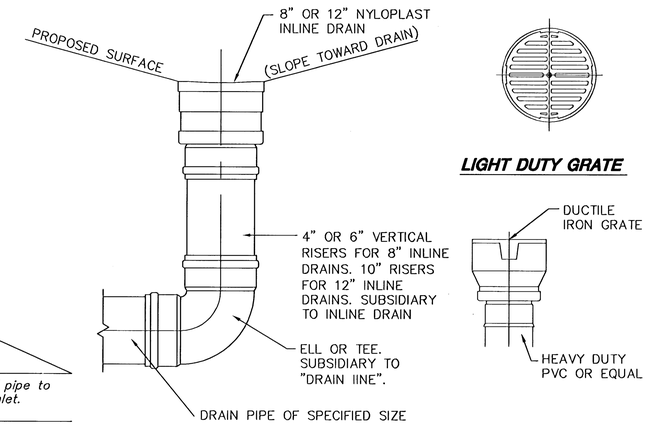

LIGHT DUTY GRATE

SECTION

NYLOPLAST GRATES/COVERS
QUALITY: MATERIALS SHALL CONFORM TO ASTM A536 GRADE 70-50-05
MATERIAL: DUCTILE IRON
PAINT: CASTINGS ARE FURNISHED WITH A BLACK PAINT

INLINE DRAIN DETAILS

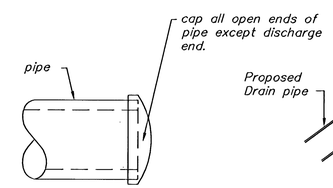

ELEVATION

PIPE CAPING DETAIL

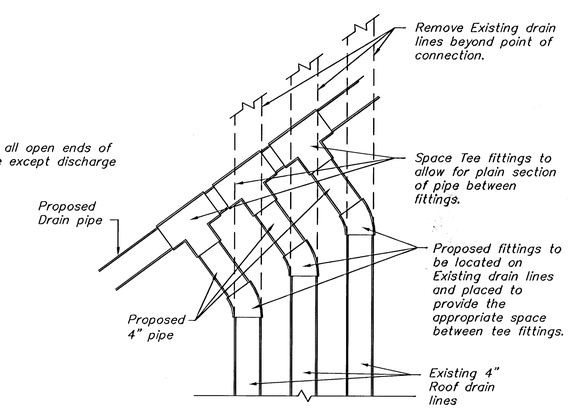

TYPICAL ROOF DRAIN LINE CONNECTION

NO SCALE

Note: Pipe shall be installed with a minimum slope of 0.50%.

Location of roof drain lines are approximate. contractor to field verify.

Drain pipe shall be PVC, HDPE or N-12 pipe. 8" and larger pipe may be SDR 35 PVC.

Drive, Pavement and/or Sidewalk Removal

Regrade & Reseed

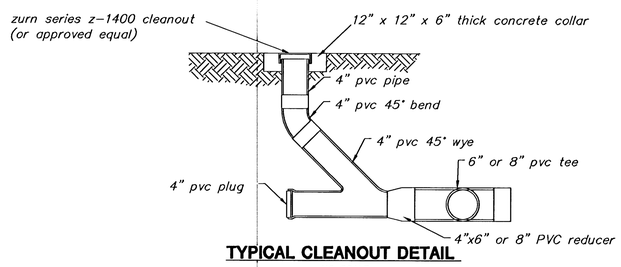

TYPICAL CLEANOUT DETAIL

NO SCALE

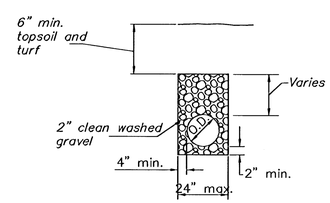

STORM DRAIN PIPE DETAIL REFERENCE

SCALE : NONE

MKEC ENGINEERING CONSULTANTS
411 N. WEBB ROAD
WICHITA, KS. 67206
316 - 684 - 9600

McCORMICK AVENUE STREET IMPROVEMENTS
PROJECT NAME

SPECIAL DRAINAGE PLAN
SHEET TITLE

JRA	DM	JRA
DESIGN BY:	DRAWN BY:	CHECKED BY:
AUGUST 2005	03245	36 / 111
DATE	JOB NO.	SHEET/OF

J:\Civil\03245\dwg\pave\03245e09.dwg 1/18/2005 11:31:04 AM CST