NOTE: CONTRACTOR TO VERIFY LOCATION AND NUMBER OF LIGHT POLES TO BE INSTALLED PRIOR TO CONSTRUCTION.

US-54 (KELLOGG AVENUE)

35+58.54 25.00' Lt.
37+00.00 32.00' Lt.
37+00.00 25.00' Lt.
38+36.00 32.00' Lt.
38+36.00 25.00' Lt.
39+26.71 38.33' Lt.
39+86.00 27.05' Lt.
41+04.55 30.40' Lt.
41+36.00 25.00' Lt.
42+81.76 25.00' Lt.
42+81.76 32.00' Lt.
43+40.69 25.00' Lt.
44+10.00 25.00' Lt.
45+54.49 25.00' Lt.
9+45.14 21.93' Lt.
8+00.00 21.93' Lt.

℄ Prop. Improvement

480V, 1-PHASE, 2 #6, #6 GND, 1-¼" PVC CONDUIT (TYPICAL)

Meter to be Located at Sta. xx+xx.xx, xx.xx' Lt. (xxxx McCormick)

DONDLINGER DRIVE

MCCORMICK AVENUE

BLDG.

CONCRETE

GRASS

ASPHALT

SIDEWALK

K-42

N

SCALE: 1"=40

40 20 0 40

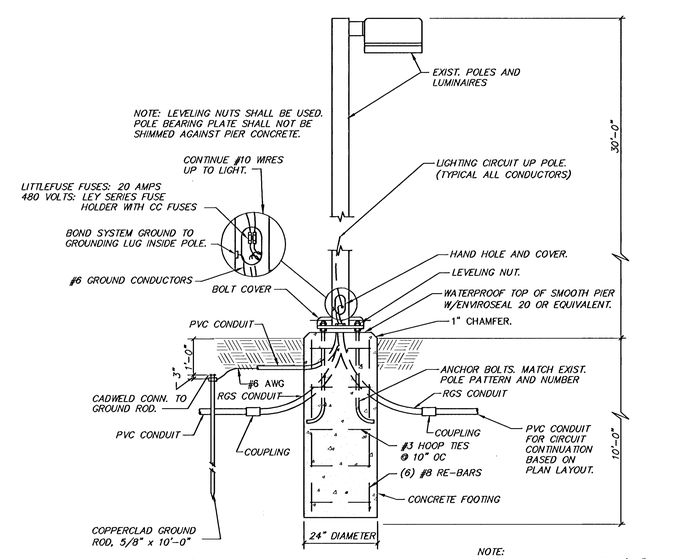

POLE BASE DETAIL

NOTE:
1. INSTALL ALL POLE BASES 3'-0" FROM BACK OF CURB.

LEGEND

- LP ✕ Existing Light pole to be removed
- LP ● Existing light pole to remain
- ⊠ Relocated light pole
- □ Junction Box
- — — — — 480V, 1-PHASE, 2-#6, #6 GND, 1-¼" PVC CONDUIT (TYPICAL)

J:\Civil\03245\DWG\pave\03245LHT.dwg 1/11/2005 10:45:34 AM CST

MKEC ENGINEERING CONSULTANTS
411 N. WEBB ROAD
WICHITA, KS. 67206
316 - 684 - 9600

McCORMICK AVENUE STREET IMPROVEMENTS
PROJECT NAME

STREET LIGHTING PLAN
SHEET TITLE

JRA	DPG	JRA
DESIGN BY:	DRAWN BY:	CHECKED BY:
AUGUST 2005	03245	56 / 111
DATE	JOB NO.	SHEET/OF