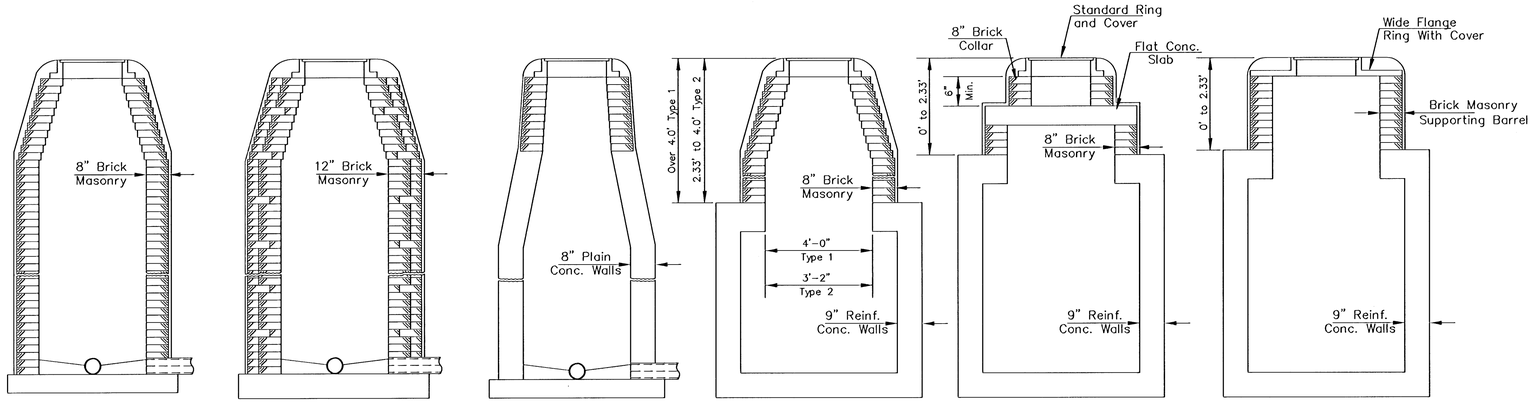

TYPE A
Single Wall Masonry

TYPE B
Double Wall Masonry

TYPE C & D
Cast in Place
(Type D is plastic lined & has brick draw)

TYPE 1 & 2
Reinforced Concrete

TYPE 3
Reinforced Concrete

TYPE 4
Reinforced Concrete
(Wide Flange Ring)

DEFINITION SKETCHES – CITY OF WICHITA STANDARD MANHOLES

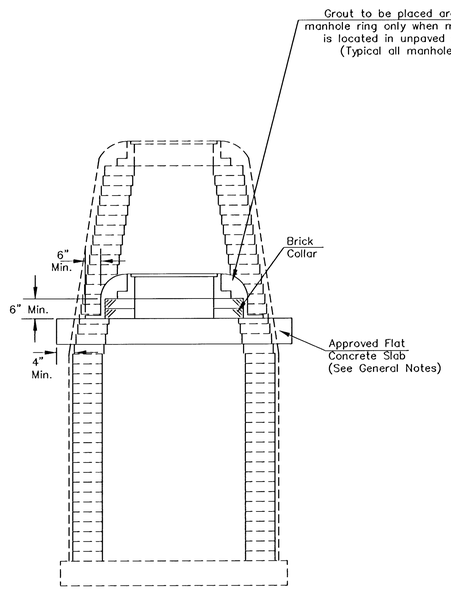

DOWNWARD ADJUSTMENT
(GREATER THAN 12")

All Types

THE APPROPRIATE PROTIONS OF THE DRAW AND BARREL OF TYPE A, B, C, D, 1 AND 2 MANHOLES SHALL BE REMOVED. A FLAT CONCRETE SLAB SHALL BE PLACED AND THE RING AND COVER RESET. ALL WORK AND MATERIALS SHALL CONFORM TO THE DETAILS SHOWN AND THE GENERAL NOTES.

COURSES OF BRICK BARREL SUPPORTING THE WIDE FLANGE RING FOR TYPE 4 MANHOLES AND FLAT CONCRETE SLAB FOR TYPE 3 MANHOLES SHALL BE REMOVED AS NECESSARY PRIOR TO RESETTING THE WIDE FLANGE RING OR FLAT CONCRETE SLAB AND RING. ALL WORK AND MATERIALS SHALL CONFORM TO THE DETAILS SHOWN AND THE GENERAL NOTES.

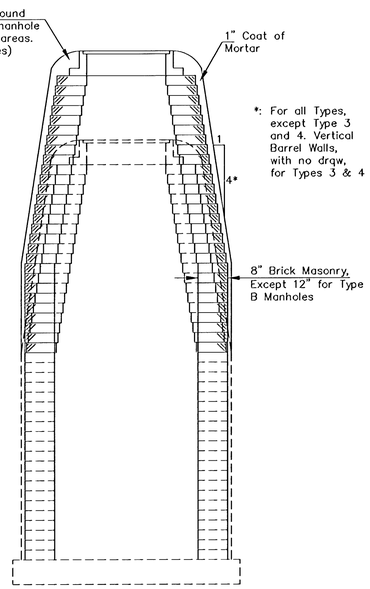

UPWARD ADJUSTMENT
(GREATER THAN 12")

All Types

THE ENTIRE DRAW OF TYPES A, B, C, D, 1 AND 2 MANHOLES SHALL BE REMOVED, THE MANHOLE BARREL RAISED THE APPROPRIATE AMOUNT, A NEW DRAW CONSTRUCTED, AND THE RING AND COVER RESET. THE UPPER PORTION OF TYPE 3 MANHOLES SHALL BE REMOVED TO THE BOTTOM OF THE FLAT CONCRETE SLAB, THE BRICK MASONRY BARREL SUPPORTING THE SLAB SHALL BE RAISED THE APPROPRIATE AMOUNT, AND THE SLAB AND RING AND COVER RESET. THE WIDE FLANGE RING AND COVER OF TYPE 4 MANHOLES SHALL BE REMOVED, THE BRICK MASONRY BARREL SUPPORTING THE RING SHALL BE RAISED THE APPROPRIATE AMOUNT AND THE RING AND COVER RESET. ALL WORK REQUIRED FOR A GREATER THAN TWELVE INCH (12") UPWARD ADJUSTMENT OF ANY MANHOLE SHALL BE ACCOMPLISHED WITH BRICK MASONRY IN ACCORDANCE WITH THE DETAILS SHOWN AND THE GENERAL NOTES.

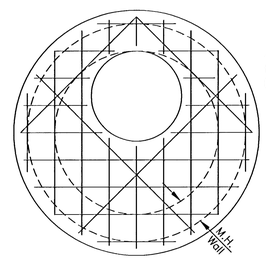

* PLAN
ALTERNATE OPENING LOCATION

*: To be used only if necessary to keep ring and cover from conflicting with curb or combined curb and gutter. Flat concrete slab shall be rotated on existing manhole to position ring and cover in pavement or behind curb.

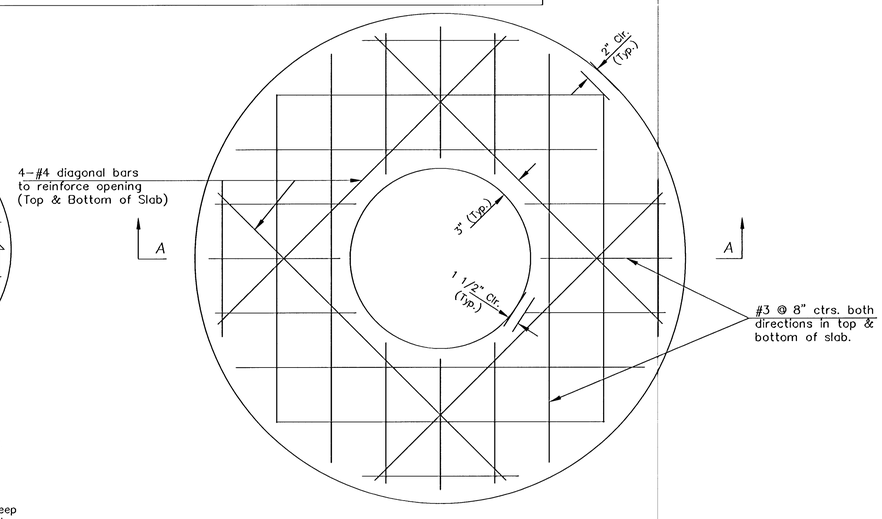

PLAN

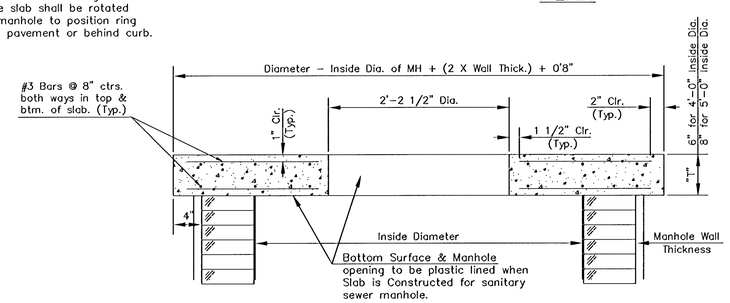

SECTION A–A

FLAT CONCRETE SLAB DETAILS

THE CITY OF WICHITA

CITY ENGINEER'S OFFICE
CITY HALL – SEVENTH FLOOR
455 NORTH MAIN STREET
WICHITA, KANSAS 67202
(316) 268-4501
(316) 268-4114 FAX

MANHOLE ADJUSTMENT DETAILS

JAMES ARMOUR P.E. – CITY ENGINEER

PROJECT NUMBER	INDEX CODE
472-84001	706900
DATE MAR 96	SHEET 27 OF 58