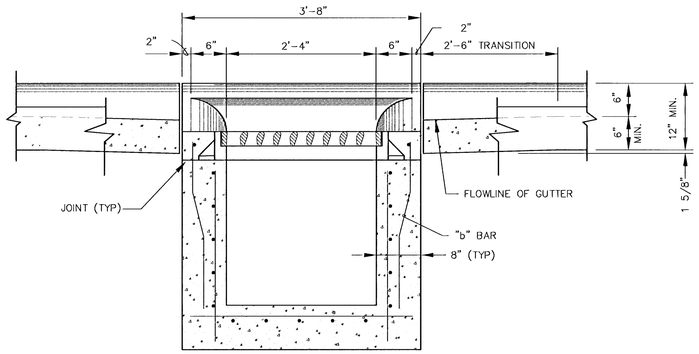

SECTION C - C

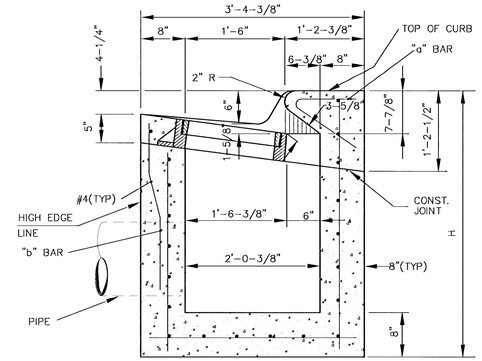

SECTION A - A

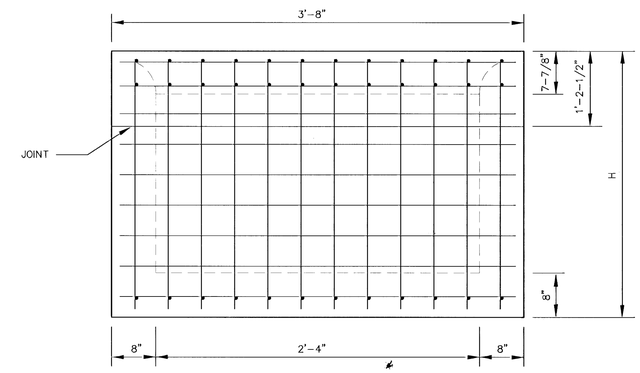

REBAR SIZES, SPACING, AND CLEARANCES PER NOTE 3.

REAR WALL

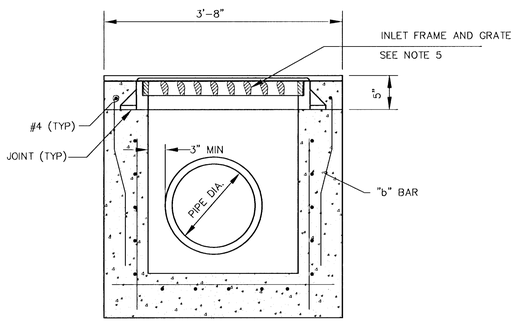

SECTION D - D

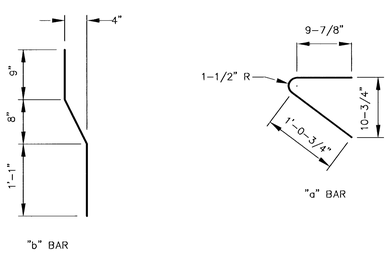

BENDING DIAGRAM

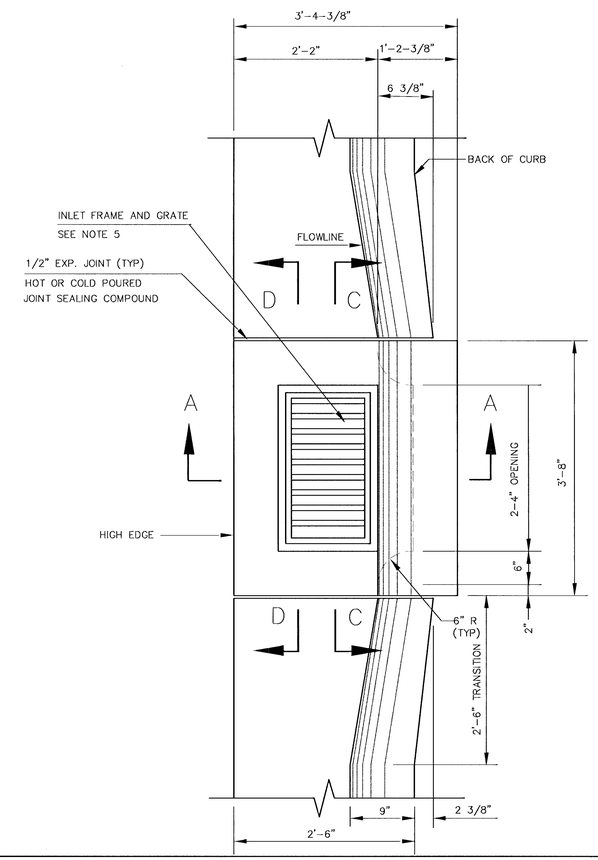

GENERAL NOTES

1. USE THE CONCRETE MIX SPECIFIED FOR THE CITY OF WICHITA CONCRETE PAVEMENT THROUGHOUT. ALL EXPOSED EDGES SHALL BE FINISHED WITH AN EDGING TOOL.
2. INLET INVERT SHALL BE SHAPED WITH 8 SACK MIX CONCRETE TO CREATE FLOW CHANNELS AND TO INCREASE HYDRAULIC EFFICIENCY SUCH THAT THE INLET WILL BE SELF CLEANING BETWEEN ALL INLET AND/OR OUTLET PIPES.
3. ALL BARS ARE #4 WITH 6" SPACING AND SHALL HAVE A MINIMUM CLEARANCE OF 1-1/2" UNLESS OTHERWISE NOTED ON THE PLANS.
4. NO DEDUCTIONS WILL BE MADE IN PAY LENGTH OF CURB, GUTTER, OR CURB AND GUTTER THROUGH THE INLET AREA.
5. USE DEETER 2441 INLET FRAMES WITH GRATES OR APPROVED EQUAL. INLET FRAMES TO BE PROOF LOAD TESTED TO 40,000 LBS. ON UNSUPPORTED SIDE.
6. REINFORCING BARS SHALL BE CUT OR BENT AROUND PIPES. NO DEDUCTION IN CONCRETE QUANTITIES SHALL BE MADE FOR PIPE OPENINGS.
7. THE VANES OF THE GRATE SHALL BE ORIENTED TO INTERCEPT FLOW FROM THE DIRECTION SHOWN BY FLOW ARROWS ON THE PLANS.

SCALE

1" = 1'-0"

0' 0.5' 1' 2'

MID-KANSAS ENGINEERING CONSULTANTS, INC.
411 N. WEBB ROAD
WICHITA, KS. 67206
316-684-9600

DETAIL SPECIAL TYPE II CURB INLET

PROJECT NAME

2'-6" COMBINED CURB AND GUTTER (KDOT-MOD.) INLET OPENING-3 5/8"x2'-4"

SHEET TITLE

DESIGN BY:	DRAWN BY: SWM	CHECKED BY:
DATE	JOB NO.	SHEET/OF 16 / 61

G:\CIVIL\3210\SPCL.INL1.DWG Tue May 11 15:34:33 1999