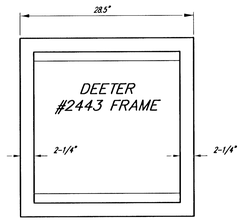

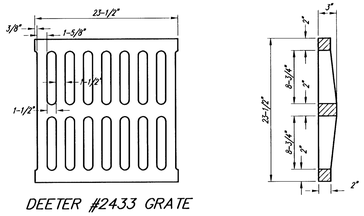

DEETER #2433 GRATE

24" x 24" Frame and Grate Detail

NOTE: Grates shall be inprinted on the top surface with "CITY OF WICHITA" using letters at least 1" in height. Other marking methods may be approved by the engineer.

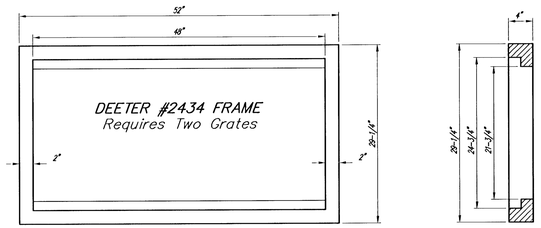

Double 24" x 24" Frame Detail

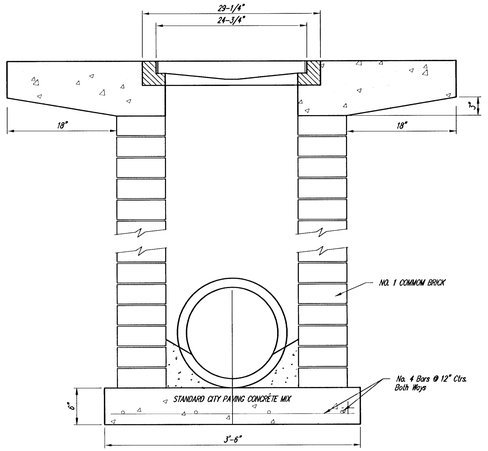

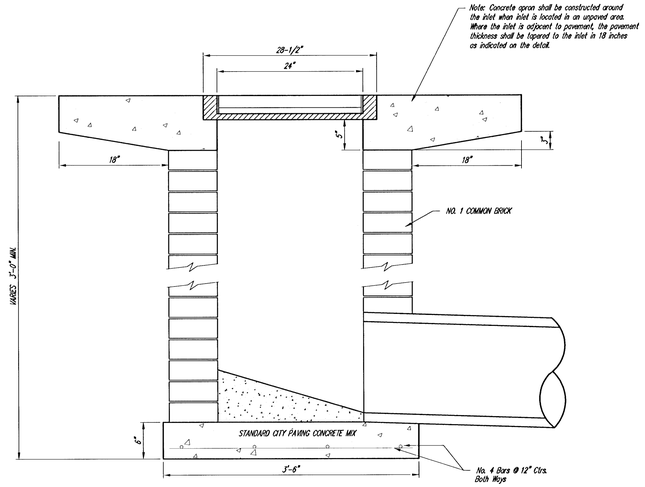

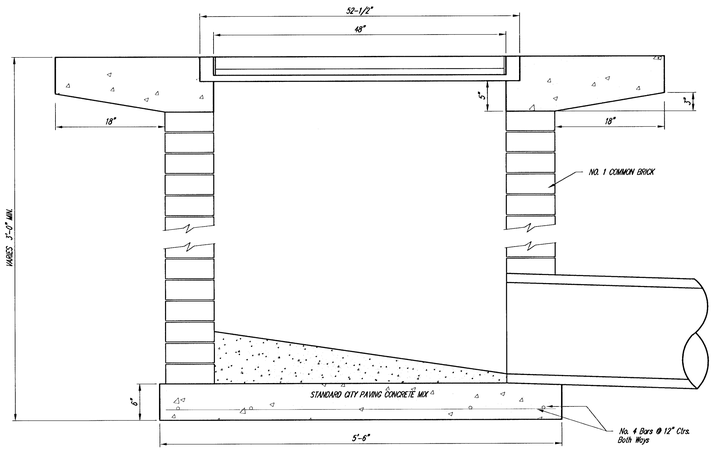

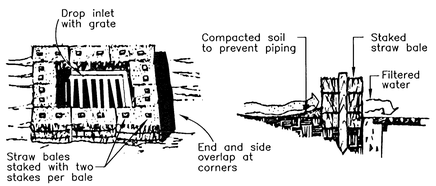

HAY BALE SEDIMENT BARRIER

THE CITY OF WICHITA

CITY ENGINEER'S OFFICE
CITY HALL – SEVENTH FLOOR
455 NORTH MAIN STREET
WICHITA, KANSAS 67202
(316) 268-4501
(316) 268-4114 FAX

DROP INLET
2' X 2'/2' X 4'

M. E. LINDEBAK P.E. – CITY ENGINEER

PROJECT NUMBER	INDEX CODE
472-83424	765705
DATE MAR 96	SHEET 99 OF 112

No.	Date	By	Approved	Revision

EQUESTRIAN ESTATES – PHASE 1
STREET IMPROVEMENTS
DROP INLET/HAY BALE SEDIMENT BARRIER
CITY OF WICHITA, KANSAS
MICHAEL E. LINDEBAK, P.E. – CITY ENGINEER
C.O.W. Project # 472-83424 O.C.A. # 765705

POE & ASSOCIATES OF KANSAS, INC.
CONSULTING ENGINEERS
5940 E. Central, Suite 200 ■ Wichita, KS 67208-4242
Phone 316/685-4114 ■ FAX 316/685-4444

FINAL

Designed By: J. Ubert / J. Dickman
Drawn By: J. Dickman
Poe Job No.: 16944
Date: March 2002

Sheet
99 of 112

G:\APPS\DCA\P16944\BASE-ST.dwg Thu Mar 21 14:26:46 2002 Bernard Kulla - POE & ASSOCIATES OF KANSAS INC.

SHT DRP