PROJECT NO.	SHEET NO.	TOTAL SHEETS
472-76-245-83375-000-000-001	23	58

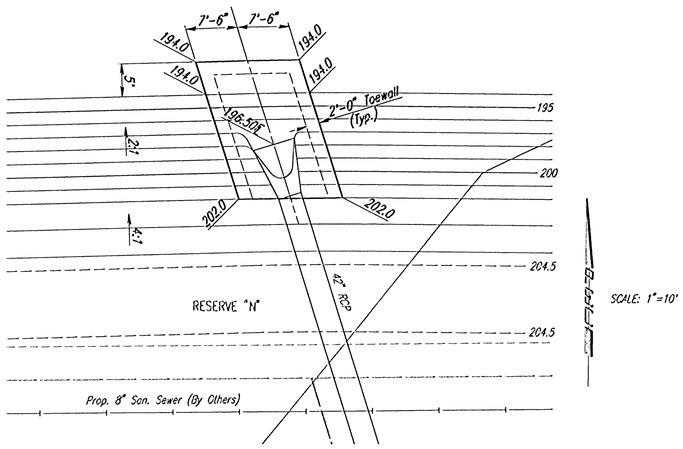

RIPRAP PLAN
SWS LINE NO. 1

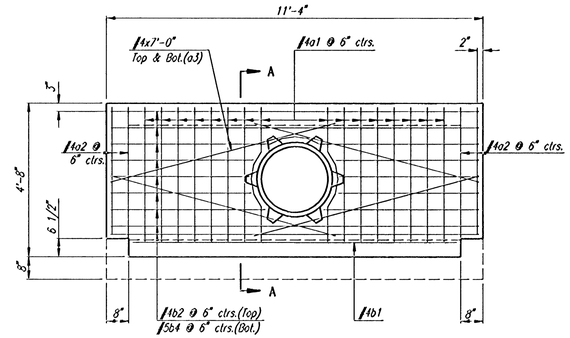

PLAN

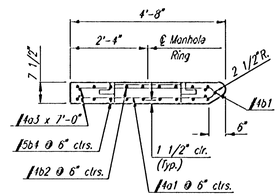

SECTION A-A

SPECIAL TYPE 1A INLET TOP DETAILS

Inlet Sta. 10+00.0 SWS Line No. 1
Inlet Sta. 10+35.3 SWS Line No. 1
Inlet Sta. 20+51.3 SWS Line No. 2

See Sheet No. 28 for Cast Iron Inlet Ring Details

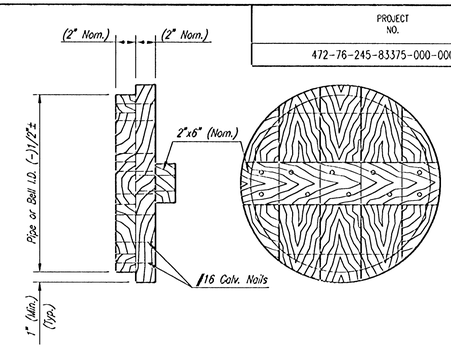

TEMPORARY REDWOOD PIPE PLUG DETAIL

NOTE: THE FREE END OF ALL PIPE STUBS INSTALLED SHALL BE PLUGGED WITH A REDWOOD PLUG AS SHOWN. THE PLUGS SHALL BE CONSTRUCTED WITH CONSTRUCTION GRADE REDWOOD AND SECURELY NAILED TOGETHER WITH #16 GALVANIZED NAILS.

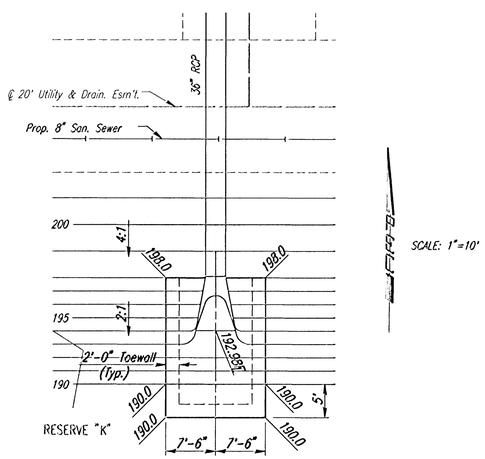

RIPRAP PLAN
SWS LINE NO. 2

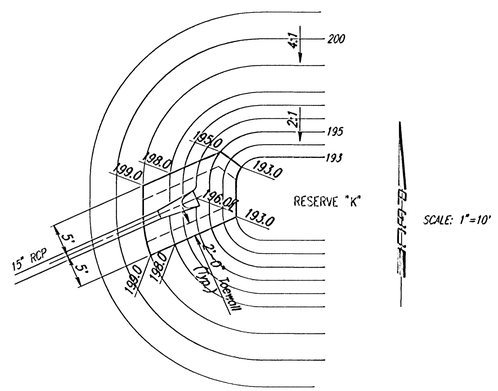

RIPRAP PLAN
SWS LINE NO. 3

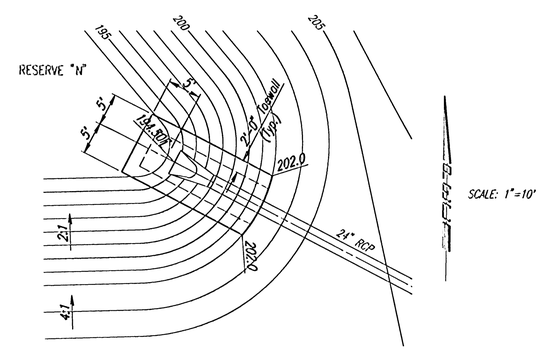

RIPRAP PLAN
SWS LINE NO. 4

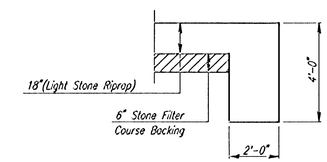

TYPICAL SECTION THRU TOEWALL

NO SCALE

NOTES

1. ALL RIPRAP FOR THIS PROJECT SHALL BE NATURAL STONE. NEITHER BROKEN CONCRETE, FABRIC ENVELOPE, NOR PREMIXED DRY PACKAGED CONCRETE BAG ALTERNATES WILL BE ALLOWED.
2. TOEWALLS SHALL BE INSTALLED WHERE SHOWN ON PLANS, AND SHALL BE SUBSIDIARY.
3. GROUTING OF THE SURFACE OF THE RIPRAP SHALL NOT BE PERFORMED.

No.	Revisions	By	Date
1			

REMINGTON PLACE-PHASE I
CITY OF WICHITA, KANSAS

SPECIAL TYPE 1A INLET TOP AND RIPRAP DETAILS

Professional Engineering Consultants, P.A.
303 S. TOPEKA • WICHITA, KANSAS 67202
316-262-2691 • FAX 316-262-3003

Designed by	BER	Checked by	
Drawn by	BJS	Date JUNE 2001	Job No. 01158

i: 2001/01158/miscdrn.dgn
Date Plotted: Oct. 23, 2001
Deliver to: Brent Remsberg