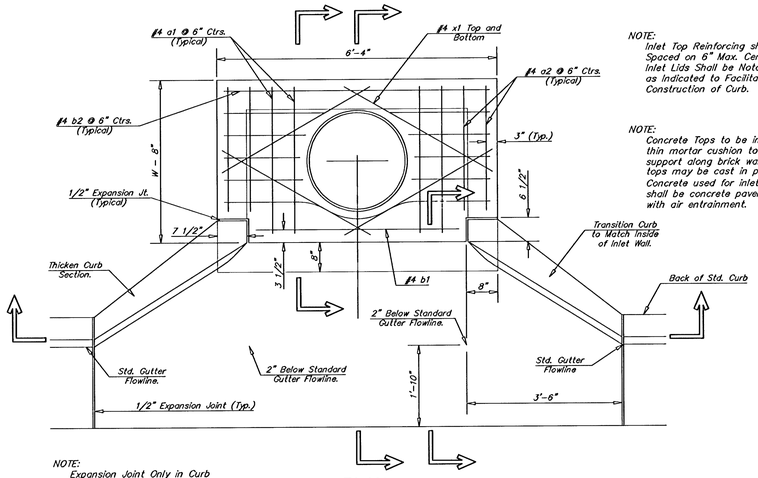

NOTE:
Expansion Joint Only in Curb Area With Concrete Pavment.

PLAN

NOTE:
Inlet Top Reinforcing shall be Spaced on 6" Max. Centers. Inlet Lids Shall be Notched Out as Indicated to Facilitate Construction of Curb.

NOTE:
Concrete Tops to be installed on thin mortar cushion to insure full support along brick walls. Concrete tops may be cast in place or precast. Concrete used for inlet construction shall be concrete pavement mix with air entrainment.

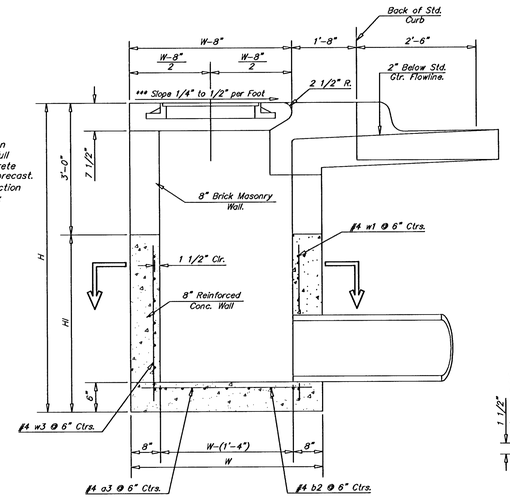

SECTION A–A

***NOTE: Slope of inlet tops to Match Sidewalk or Parking Slopes within Limits Indicated.

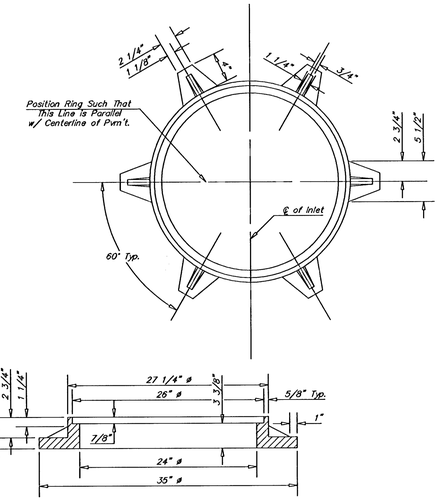

MANHOLE RING AND COVER

Weight = 180 Lbs.

*See City of Wichita Standard Manhole Ring and Cover Detail Sheet for Cover Details to Be Used With Inlet Frame.

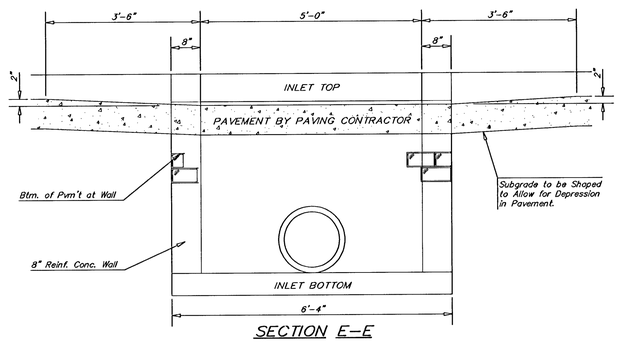

SECTION E–E

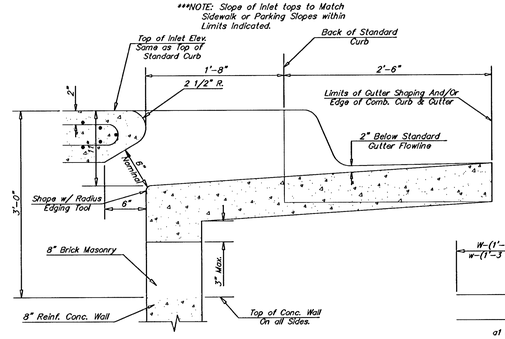

SECTION B–B

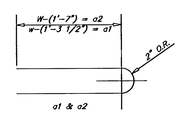

BENDING DIAGRAM

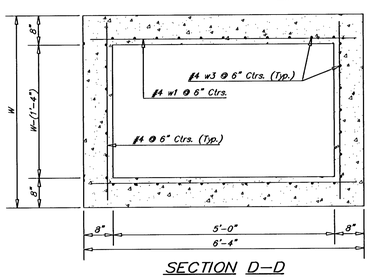

SECTION D–D

NOTE: Contractor shall have the option of constructing 8" brick masonry walls between the concrete inlet base and top on this inlet when W=6'-4" and H=7'-0" or less.

Additional curb and gutter construction necessary to connect set-back inlet to pavement will be paid for at the unit price bid for each inlet hookup.

Inlet invert shall be shaped with 8 sack sand mix concrete to create flow channels and to increase hydraulic efficiency such that the inlet will be self-cleaning between all inlet and/or outlet pipes.

The ends of all pipes installed in inlets shall be cut off flush with the inside face of the inlet wall

PRECAST SLAB AND FLOOR REINFORCING											
		W = 4'-4"		W = 5'-4"		W = 6'-4"		W = 7'-4"		W = 8'-4"	
MARK	SIZE	NO.	LENGTH	NO.	LENGTH	NO.	LENGTH	NO.	LENGTH	NO.	LENGTH
* a1	#4	6	6'-7"	6	8'-7"	8	10'-7"	6	12'-7"	6	14'-7"
a2	#4	4	5'-0"	4	8'-0"	4	10'-0"	4	12'-0"	4	14'-0"
a3	#4	13	4'-1"	13	5'-1"	13	6'-1"	13	7'-1	13	8'-1"
b1	#4	1	4'-9"	1	4'-9"	1	4'-9"	1	4'-9"	1	4'-9"
* b2	#4	23	6'-1"	29	6'-1"	35	6'-1"	41	6'-1"	47	6'-1"
x1	#4	8	3'-10"	8	4'-2"	8	4'-6"	8	4'-10"	8	5'-2"

WALL REINFORCING											
		W = 4'-4"		W = 5'-4"		W = 6'-4"		W = 7'-4"		W = 8'-4"	
MARK	SIZE	NO.	LENGTH	NO.	LENGTH	NO.	LENGTH	NO.	LENGTH	NO.	LENGTH
w1	#4	①	6'-1"	①	6'-1"	①	6'-1"	①	6'-1"	①	6'-1"
w2	#4	①	4'-1"	①	5'-1"	①	6'-1"	①	7'-1"	①	8'-1"
w3	#4	32	②	36	②	40	②	44	②	48	②

* Field Bend or Cut Reinforcing as Required for Clearance.
① 4 (H1 - 12") (H1 - 21") Rounded down to nearest 0.5'
② H1 - 3"

STANDARD CURB INLET PRECAST TOPS			
W	PRE-CAST TOP SIZE	PIPE SIZE	CU. YD. CONC.
4'-4"	3'-8" x 6'-4" x 7 1/2"	21" & SMALLER	0.38ℓ
5'-4"	4'-8" x 6'-4" x 7 1/2"	24" & 30"	0.51ℓ
6'-4"	5'-8" x 6'-4" x 7 1/2"	36" & 42"	0.64ℓ
7'-4"	6'-8" x 6'-4" x 7 1/2"	48" & 54"	0.77ℓ
8'-4"	7'-8" x 6'-4" x 7 1/2"	60" & 66"	0.90ℓ

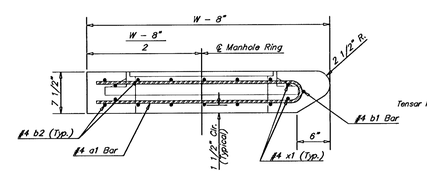

SECTION A–A

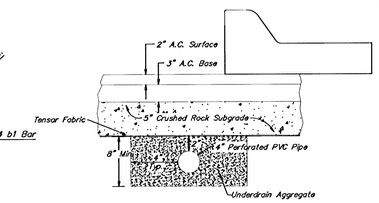

NOTE: Place 4" PVC Perforated Pipe at all drainage sump locations.

Cost of Underdrain System to be incidental to the Reinforced Crushed Rock Subgrade.

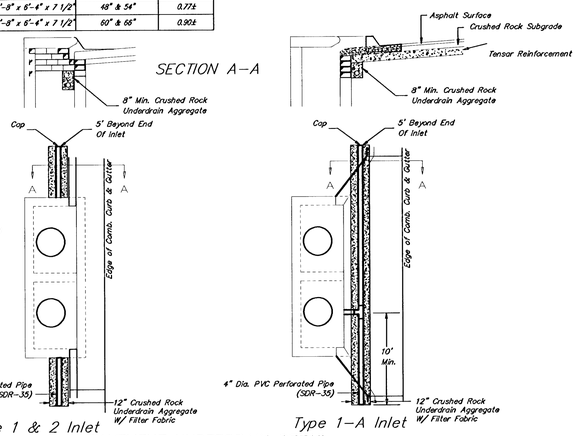

CRUSHED ROCK GRADATION REQUIREMENTS
Percent of Aggregate Retained

1 1/2"	0
3/4"	15–60
#4	40–80
#40	74–92
P-200	4–12

Rock Quality Shall Be The Same As Specified For Coarse Aggregate For Asphalt Concrete Mixes.

PAVEMENT UNDERDRAIN DETAIL

No.	Date	By	Approved	Revision

THE LOCHS AT ABERDEEN
STREET IMPROVEMENTS
5'-0" CURB INLET DETAILS
CITY OF WICHITA, KANSAS
MICHAEL E. LINDEBAK, P.E. – CITY ENGINEER
Proj.# 472-83359 O.C.A.# 765681

POE & ASSOCIATES OF KANSAS, INC.
CONSULTING ENGINEERS
5940 E. Central, Suite 200 ■ Wichita, KS 67208-4242
Phone 316/685-4114 ■ FAX 316/685-4444

FINAL

Engineer: J. Ubert
Drawn By: B. Kulla
Poe Job No.: 1656B
Date: May 2001

Sheet 19 of 58

G:\APPS\DCA\P\656Gbase.dwg Tue Jun 19 13:43:07 2001 Bernard Kulla - POE & ASSOCIATES OF KANSAS INC.